# DEVAN PLASTICS STANDARD DESIGN FOR UNDERGROUND TANKS

JOB NO.

**059-003**

CLIENT

**DEVAN PLASTICS**

## FOR CONSTRUCTION

**DRAWING LIST**

| SHEET NO. | SHEET | REVISION | REVISION DATE |
|---|---|---|---|
| G-000 | COVER PAGE | 1 | 16.04.25 |
| G-001 | GENERAL NOTES 1 | 1 | 16.04.25 |
| G-002 | GENERAL NOTES 2 | 1 | 16.04.25 |
| S-001 | NON-TRAFFICABLE SINGLE TANK INSTALLATION INSTRUCTIONS WITHOUT ANCHORS | 1 | 16.04.25 |
| S-002 | NON-TRAFFICABLE SINGLE TANK INSTALLATION INSTRUCTIONS WITH ANCHORS | 1 | 16.04.25 |
| S-003 | NON-TRAFFICABLE DOUBLE TANK INSTALLATION INSTRUCTIONS WITHOUT ANCHORS | 1 | 16.04.25 |
| S-004 | NON-TRAFFICABLE DOUBLE TANK INSTALLATION INSTRUCTIONS WITH ANCHORS | 1 | 16.04.25 |
| S-005 | NON-TRAFFICABLE TRIPLE TANK INSTALLATION INSTRUCTIONS WITHOUT ANCHORS | 1 | 16.04.25 |
| S-006 | NON-TRAFFICABLE TRIPLE TANK INSTALLATION INSTRUCTIONS WITH ANCHORS | 1 | 16.04.25 |
| S-102 | RESIDENTIAL TRAFFIC LOADING - SINGLE TANK INSTALLATION INSTRUCTIONS WITHOUT ANCHORS - SLAB ON GOOD GROUND | 1 | 16.04.25 |
| S-103 | RESIDENTIAL TRAFFIC LOADING - SINGLE TANK INSTALLATION INSTRUCTIONS WITH ANCHORS - SLAB ON GOOD GROUND | 1 | 16.04.25 |
| S-104 | RESIDENTIAL TRAFFIC LOADING - SINGLE TANK INSTALLATION INSTRUCTIONS WITHOUT ANCHORS - SLAB ON CLASS M EXPANSIVE SOIL | 1 | 16.04.25 |
| S-105 | RESIDENTIAL TRAFFIC LOADING - SINGLE TANK INSTALLATION INSTRUCTIONS WITH ANCHORS - SLAB ON CLASS M EXPANSIVE SOIL | 1 | 16.04.25 |
| S-106 | RESIDENTIAL TRAFFIC LOADING WITHOUT ANCHORS - SINGLE TANK INSTALLATION INSTRUCTIONS - SLAB ON CLASS H2 EXPANSIVE SOIL | 1 | 16.04.25 |
| S-107 | RESIDENTIAL TRAFFIC LOADING - SINGLE TANK INSTALLATION INSTRUCTIONS WITH ANCHORS - SLAB ON CLASS H2 EXPANSIVE SOIL | 1 | 16.04.25 |
| S-200 | RESIDENTIAL TRAFFIC LOADING WITHOUT ANCHORS - DOUBLE TANK INSTALLATION INSTRUCTIONS - SLAB ON GOOD GROUND | 1 | 16.04.25 |
| S-201 | RESIDENTIAL TRAFFIC LOADING - DOUBLE TANK INSTALLATION INSTRUCTIONS WITH ANCHORS - SLAB ON GOOD GROUND | 1 | 16.04.25 |
| S-202 | RESIDENTIAL TRAFFIC LOADING WITHOUT ANCHORS - DOUBLE TANK INSTALLATION INSTRUCTIONS - SLAB ON CLASS M EXPANSIVE SOIL | 1 | 16.04.25 |
| S-203 | RESIDENTIAL TRAFFIC LOADING - DOUBLE TANK INSTALLATION INSTRUCTIONS WITH ANCHORS - SLAB ON CLASS M EXPANSIVE SOIL | 1 | 16.04.25 |
| S-204 | RESIDENTIAL TRAFFIC LOADING WITHOUT ANCHORS - DOUBLE TANK INSTALLATION INSTRUCTIONS - SLAB ON CLASS H2 EXPANSIVE SOIL | 1 | 16.04.25 |
| S-205 | RESIDENTIAL TRAFFIC LOADING - DOUBLE TANK INSTALLATION INSTRUCTIONS WITH ANCHORS - SLAB ON CLASS H2 EXPANSIVE SOIL | 1 | 16.04.25 |

**DRAWING LIST**

| SHEET NO. | SHEET | REVISION | REVISION DATE |
|---|---|---|---|
| S-300 | RESIDENTIAL TRAFFIC LOADING WITHOUT ANCHORS- TRIPLE TANK INSTALLATION INSTRUCTIONS - SLAB ON GOOD GROUND | 1 | 16.04.25 |
| S-301 | RESIDENTIAL TRAFFIC LOADING - TRIPLE TANK INSTALLATION INSTRUCTIONS WITH ANCHORS - SLAB ON GOOD GROUND | 1 | 16.04.25 |
| S-302 | RESIDENTIAL TRAFFIC LOADING WITHOUT ANCHORS - TRIPLE TANK INSTALLATION INSTRUCTIONS - SLAB ON CLASS M EXPANSIVE SOIL | 1 | 16.04.25 |
| S-303 | RESIDENTIAL TRAFFIC LOADING - TRIPLE TANK INSTALLATION INSTRUCTIONS WITH ANCHORS - SLAB ON CLASS M EXPANSIVE SOIL | 1 | 16.04.25 |
| S-304 | RESIDENTIAL TRAFFIC LOADING WITHOUT ANCHORS - TRIPLE TANK INSTALLATION INSTRUCTIONS - SLAB ON CLASS H2 EXPANSIVE SOIL | 1 | 16.04.25 |
| S-305 | RESIDENTIAL TRAFFIC LOADING - TRIPLE TANK INSTALLATION INSTRUCTIONS WITH ANCHORS - SLAB ON CLASS H2 EXPANSIVE SOIL | 1 | 16.04.25 |
| S-400 | HN COMMERCIAL TRAFFIC LOADING - SINGLE TANK INSTALLATION INSTRUCTIONS WITHOUT ANCHORS - SLAB ON GOOD GROUND | 1 | 16.04.25 |
| S-401 | HN COMMERCIAL TRAFFIC LOADING - SINGLE TANK INSTALLATION INSTRUCTIONS WITH ANCHORS - SLAB ON GOOD GROUND | 1 | 16.04.25 |
| S-402 | HN COMMERCIAL TRAFFIC LOADING - SINGLE TANK INSTALLATION INSTRUCTIONS WITHOUT ANCHORS - SLAB ON CLASS M EXPANSIVE SOIL | 1 | 16.04.25 |
| S-403 | HN COMMERCIAL TRAFFIC LOADING - SINGLE TANK INSTALLATION INSTRUCTIONS WITH ANCHORS - SLAB ON CLASS M EXPANSIVE SOIL | 1 | 16.04.25 |
| S-404 | HN COMMERCIAL TRAFFIC LOADING - SINGLE TANK INSTALLATION INSTRUCTIONS WITHOUT ANCHORS - SLAB ON CLASS H2 EXPANSIVE SOIL | 1 | 16.04.25 |
| S-405 | HN COMMERCIAL TRAFFIC LOADING - SINGLE TANK INSTALLATION INSTRUCTIONS WITH ANCHORS - SLAB ON CLASS H2 EXPANSIVE SOIL | 1 | 16.04.25 |
| S-500 | HN COMMERCIAL TRAFFIC LOADING - DOUBLE TANK INSTALLATION INSTRUCTIONS WITHOUT ANCHORS - SLAB ON GOOD GROUND | 1 | 16.04.25 |
| S-501 | HN COMMERCIAL TRAFFIC LOADING - DOUBLE TANK INSTALLATION INSTRUCTIONS WITH ANCHORS - SLAB ON GOOD GROUND | 1 | 16.04.25 |
| S-502 | HN COMMERCIAL TRAFFIC LOADING - DOUBLE TANK INSTALLATION INSTRUCTIONS WITHOUT ANCHORS - SLAB ON CLASS M EXPANSIVE SOIL | 1 | 16.04.25 |
| S-503 | HN COMMERCIAL TRAFFIC LOADING - DOUBLE TANK INSTALLATION INSTRUCTIONS WITH ANCHORS - SLAB ON CLASS M EXPANSIVE SOIL | 1 | 16.04.25 |
| S-504 | HN COMMERCIAL TRAFFIC LOADING - DOUBLE TANK INSTALLATION INSTRUCTIONS WITHOUT ANCHORS - SLAB ON CLASS H2 EXPANSIVE SOIL | 1 | 16.04.25 |
| S-505 | HN COMMERCIAL TRAFFIC LOADING - DOUBLE TANK INSTALLATION INSTRUCTIONS WITH ANCHORS - SLAB ON CLASS H2 EXPANSIVE SOIL | 1 | 16.04.25 |
| S-600 | HN COMMERCIAL TRAFFIC LOADING - TRIPLE TANK INSTALLATION INSTRUCTIONS WITHOUT ANCHORS - SLAB ON GOOD GROUND | 1 | 16.04.25 |
| S-601 | HN COMMERCIAL TRAFFIC LOADING - TRIPLE TANK INSTALLATION INSTRUCTIONS WITH ANCHORS - SLAB ON GOOD GROUND | 1 | 16.04.25 |
| S-602 | HN COMMERCIAL TRAFFIC LOADING - TRIPLE TANK INSTALLATION INSTRUCTIONS WITHOUT ANCHORS- SLAB ON CLASS M EXPANSIVE SOIL | 1 | 16.04.25 |
| S-603 | HN COMMERCIAL TRAFFIC LOADING - TRIPLE TANK INSTALLATION INSTRUCTIONS WITH ANCHORS - SLAB ON CLASS M EXPANSIVE SOIL | 1 | 16.04.25 |
| S-604 | HN COMMERCIAL TRAFFIC LOADING - TRIPLE TANK INSTALLATION INSTRUCTIONS WITHOUT ANCHORS - SLAB ON CLASS H2 EXPANSIVE SOIL | 1 | 16.04.25 |
| S-605 | HN COMMERCIAL TRAFFIC LOADING - TRIPLE TANK INSTALLATION INSTRUCTIONS WITH ANCHORS - SLAB ON CLASS H2 EXPANSIVE SOIL | 1 | 16.04.25 |


Structural Engineers New Zealand

**STRUCTURAL ENGINEERS NEW ZEALAND**
CONSULTING STRUCTURAL ENGINEERS

RESIDENTIAL, COMMERCIAL, INDUSTRIAL,
SEISMIC, TEMPORARY WORKS

LEVEL 1, 52 HIGHBROOK DRIVE, EAST TAMAKI,
AUCKLAND 2013
info@structural-engs.co.nz www.structural-engs.co.nz
phone: +64 9 275 60 29, Evening: +64 9 889 93 50

## GENERAL NOTES

1. THESE DRAWINGS ARE TO BE READ IN CONJUNCTION WITH ARCHITECTURAL DRAWINGS, CIVIL ENGINEERING DRAWINGS, THE GEOTECHNICAL REPORT & OTHER RELEVANT CONSULTANTS DRAWINGS FOR THE PROPERTY. COPIES OF ALL THE LISTED DOCUMENTS ARE TO BE KEPT ON SITE AT ALL TIMES.
2. ALL WORKS ARE TO COMPLY WITH CURRENT VERSIONS OF THE NEW ZEALAND BUILDING ACT AND THE BUILDING CODE.
3. DIMENSIONS ARE TO BE READ FROM DRAWINGS, NOT SCALED FROM THEM. ALL DIMENSIONS ARE TO BE CHECKED ON-SITE PRIOR TO SETTING OUT. REFER TO ARCHITECTURAL DRAWINGS FOR SET OUT.
4. ALL DIMENSIONS ARE IN MILLIMETRES (mm), ALL LEVELS ARE IN METRES (m), UNLESS OTHERWISE NOTED.
5. THE CONTRACTOR SHALL TAKE PRECAUTIONS TO ESTABLISH LOCATION OF EXISTING SERVICES AT SITE. SERVICES SHOWN ON DRAWINGS ARE IN APPROXIMATE LOCATIONS ONLY. SERVICES OTHER THAN THOSE SHOWN MAY EXIST ON SITE. ONLY HAND EXCAVATION ALLOWED WITHIN ONE METRE OF SERVICES.
6. THE CONTRACTOR IS RESPONSIBLE FOR THE DESIGN, INSTALLATION AND MAINTENANCE OF ALL NECESSARY TEMPORARY WORKS INCLUDING TEMPORARY STRUCTURAL SUPPORTS TO ENSURE STRENGTH AND STABILITY OF THE STRUCTURE AND ADEQUATE SUPPORT TO THE STRUCTURES WITHOUT ANY ADVERSE EFFECT TO THE STRUCTURES OR ADJACENT STRUCTURES. THE CONTRACTOR IS RESPONSIBLE FOR THE STABILITY OF THE STRUCTURE DURING CONSTRUCTION
7. THE CONTRACTOR SHALL ENSURE THAT ALL REGULATORY CONSENT DOCUMENTATION AS REQUIRED BY THE COUNCIL OR OTHERS HAS BEEN ISSUED BEFORE COMMENCING CONSTRUCTION WORKS. STRUCTURAL ENGINEERS NZ (SENZ) TO BE PROVIDED THE BCO# PRIOR TO THE FIRST INSPECTION.
8. ALL MATERIALS AND WORKMANSHIP SHALL BE IN ACCORDANCE WITH THE CURRENT CODES OF PRACTICE EXCEPT WHERE VARIED BY THE DESIGN FEATURES REPORT AND/OR DRAWINGS.
9. THE LOCATION, SIZE AND DETAILS OF ALL PENETRATIONS, RECESSES, SLEEVES, HOLES, ETC IN STRUCTURAL MEMBERS SUCH AS RIBS (FOUNDATIONS), BEAMS, COLUMNS OR ANY REINFORCING MUST BE APPROVED BY THE ENGINEER PRIOR TO CONSTRUCTION UNLESS SHOWN ON THE STRUCTURAL DRAWINGS WITH A SPECIFIC PENETRATION DETAIL. THESE ITEMS SHALL BE CAST-IN, FORMED, OR SHOP FABRICATED AND SHALL NOT BE CUT OR COVED ON SITE, UNLESS NOTED OTHERWISE OR APPROVED BY THE ENGINEER.
10. SUBSTITUTION FOR OR AMENDMENT OF SPECIFIED DETAILS OR MATERIALS SHALL NOT BE CARRIED OUT WITHOUT APPROVAL OF THE ENGINEER.
11. WHERE PROPRIETARY PRODUCTS ARE SPECIFIED IN THE DOCUMENTS THE CONTRACTOR MAY SUBMIT AN ALTERNATIVE PRODUCT FOR APPROVAL BY THE ENGINEER.
12. VERIFY ALL DIMENSIONS WITH ARCHITECTURAL, SERVICES, AND ALL OTHER PROJECT DRAWINGS PRIOR TO CONSTRUCTION COMMENCING. ANY DISCREPANCIES WITH THE ARCHITECTURAL DRAWINGS RELATING TO THE CONSTRUCTION WORKS SHOWN ON THESE DRAWINGS MUST BE REFERRED TO THE ENGINEER & ARCHITECT FOR CLARIFICATION.
13. SENZ MUST BE CONTACTED 48HOURS PRIOR TO AN INSPECTION. LATE NOTICE MAY RESULT IN DELAYS, SEE CONTACT DETAILS BELOW (HEADER).
14. SENZ ARE TO INSPECT ALL STRUCTURAL ITEMS PART OF THIS DRAWING SET, PROPRIETARY BRACING SUCH AS GIB TO BE INSPECTED BY THE LOCAL COUNCIL.

## SITE CLEARANCE AND DEMOLITION

1. ALL WORK SHOULD BE IN ACCORDANCE WITH THE HEALTH AND SAFETY IN EMPLOYMENT ACT 1992.
2. PLEASE CONTACT WORKSAFE NZ WHEN IN DOUBT (0800 030 040)
3. DEMOLITION WORKS ARE NOT PART OF THE SCOPE OF SENZ.
4. DEMOLITION WORK IS THE RESPONSIBILITY OF THE CONTRACTOR.
5. IT IS RECOMMENDED, WHERE DEMOLITION WORK IS REQUIRED, STRUCTURAL INTEGRITY OF THE EXISTING STRUCTURE SHALL NOT BE UNDERMINED TO ENSURE THE NECESSARY CONTINUED CONSTRUCTION IF POSSIBLE.
6. CARE MUST BE TAKEN BY THE CONTRACTOR TO ENSURE TEMPORARY PROPPING, SHORING AND BRACING IS IN PLACE TO REDUCE RISK AND DAMAGE WHERE REQUIRED.

## FOUNDATION NOTES

1. THE EXCAVATION SHOULD BE AS INDICATED ON DRAWINGS OR TO A LEVEL WHERE THE SOIL ACHIEVES A GEOTECHNICAL ULTIMATE BEARING CAPACITY OF 300kPa.
2. COMPACTED HARDFILL WHERE REQUIRED SHALL BE IN ACCORDANCE WITH NZS 4402:1998 WITH REGARDS TO MOISTURE CONTENT.
3. COMPACTION WHERE REQUIRED SHALL BE CARRIED OUT IN CONTROLLED LAYERS OF NO MORE THAN 150mm COMPACTED DEPTH, AS PER THE GEOTECHNICAL ENGINEERS RECOMMENDATIONS.
4. CONCRETE FOUNDATION MUST BE CURED FOR A MINIMUM OF 7 DAYS AS PER NZS3109.
5. CONTRACTOR MUST USE A MINIMUM OF 30MPa CONCRETE U.N.O.
6. CONTROL JOINTS ARE RECOMMENDED @ 25m LENGTHS OF CONTINUOUS CONRETE U.N.O.
7. PENETRATIONS ARE NOT PERMITTED THROUGH CONCRETE RIBS (FOUNDATIONS), THICKENINGS OR REINFORCING UNLESS SPECIFICALLY DETAILED IN THE ENGINEERING DRAWINGS.

## FOUNDATION NOTES CONTINUED

**EXPANSIVE SOILS NOTE (AS PER AS2870:2011):**
11. COMPACTION BY A VIBRATOR IS REQUIRED FOR CLASSES M, H1, H2 (OR H - HIGHLY TO NZBC) AND E SITES.

12. THE CONTRACTOR IS RESPONSIBLE FOR TEMPORARY SERVICE EXCAVATIONS, THIS CAN REMOVE SUPPORT FROM FOOTINGS. THIS LACK OF SUPPORT CAN RESULT IN SETTLEMENT OR ROTATION OF THE FOOTING.

13. EXCAVATION LOCATION AND DEPTH SHOULD BE SUCH THAT THE EXCAVATION IS NOT DEEPER THAN THE CRITICAL DEPTH LINE (ANGLED 30DEGREES FOR SAND AND 45DEGREES FOR CLAY) FROM THE BASE OF THE FOOTING TO HORIZONTAL. THE CRITICAL DEPTH LINE MAY BE LOWERED, IF REQUIRED, BY LOWERING THE FOUNDING LEVEL OF THE FOOTING.

14. WHEN TRENCHES ARE TO BE EXCAVATED BELOW THE CRITICAL DEPTH LINE, THE CRITICAL BACKFILL AREA SHOULD BE BACKFILLED WITH MATERIAL OF ADEQUATE STRENGTH AND LOW PERMEABILITY TO MINIMIZE WATER MIGRATION AND SETTLEMENT. CONCRETE, MORTAR OR (PREFERABLY) CEMENT-STABILIZED SOIL MAY BE USED.

16. FOUNDATION FOR SLABS. THE FOUNDATION SHALL SATISFY THE FOLLOWING:

(A) TOP SOIL CONTAINING GRASS ROOTS OR OTHER ORGANIC MATERIAL SHALL BE REMOVED FROM THE AREA ON WHICH THE SLAB IS TO REST.

(B) ON SITES SUBJECT TO WIND OR WATER EROSION, THE FOUNDATION OF THE EDGE BEAM OR FOOTING SHALL BE PROTECTED.

(C) THE FOLLOWING APPLY TO THE FOUNDATION FOR SLABS, INCLUDING EDGE AND INTERNAL BEAMS:
(I) WHERE SLAB PANELS, EDGE BEAMS, INTERNAL BEAMS AND LOAD-SUPPORT THICKENINGS ARE TO BE SUPPORTED ON NATURAL SOIL, THE BEARING CAPACITY OF THE SOIL SHALL BE NOT LESS ITEM 1 UNDER "FOUNDATION NOTES". NOTE: SLAB PANELS, INTERNAL BEAMS AND LOAD SUPPORT THICKENINGS MAY BE FOUNDED ON CONTROLLED OR ROLLED FILL.
(II) EDGE BEAMS MAY BE FOUNDED ON CONTROLLED FILL. THIS FILL SHALL CONTINUE PAST THE EDGE OF THE BUILDING BY AT LEAST 1 M AND SHALL BE RETAINED OR BATTERED BEYOND THIS POINT BY A SLOPE NOT STEEPER THAN 1:2. EDGE BEAMS SHALL NOT BE FOUNDED ON ROLLED FILL.
(III) EDGE FOOTINGS NOT TIED TO A FOOTING SLAB SHALL BE FOUNDED IN NATURAL SOIL WITH A BEARING CAPACITY OF AS PER ITEM 1 UNDER "FOUNDATION NOTES" OR MAY BE FOUNDED ON CONTROLLED SAND FILL ON A CLASS A OR CLASS S SITE.

(D) THE BASES OF EDGE BEAMS AND FOOTINGS MAY BE STEPPED OR SLOPED NOT MORE THAN 1:10.

(E) WHERE SITES WITH AGGRESSIVE SOILS, A BLINDING LAYER OF SAND IS REQUIRED. WHERE USED, THE BLINDING LAYER OF SAND SHALL COMPLY WITH AS2870:2017 CLAUSE 6.4.2 IF DEEPER THAN 100 MM.

REBATE PLAN VIEW

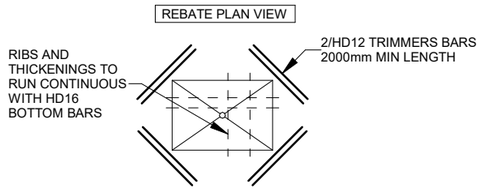


## ABBREVIATIONS

BGL = BELOW GROUND LEVEL
C/C = CENTRE TO CENTRE
E.W = EACH WAY
F.F = FAR FACE
F.F.L. = FINISHED FLOOR LEVEL
F.G.L = FINISHED GROUND LEVEL
F.W. = FILLET WELD
F.W.A.R. = FILLET WELD ALL ROUND
G.W.L. = GROUND WATER LEVEL
HORIZ. = HORIZONTAL
L.A.R. = LAP AT RANDOM
N.F. = NEAR FACE
STRP = STIRRUP
T & B = TOP AND BOTTOM
U.N.O = UNLESS NOTED OTHERWISE
T.O.C. = TOP OF CONCRETE
T.O.S. = TOP OF STEEL
VERT. = VERTICAL
CHS = CIRCULAR HOLLOW SECTION
EA = EQUAL ANGLE
PFC = PARALLEL FLANGE CHANNEL
RHS = RECTANGULAR HOLLOW SECTION
SHS = SQUARE HOLLOW SECTION
TFB = TAPER FLANGE BEAM
UA = UNEQUAL ANGLE
UB = UNIVERSAL BEAM
UC = UNIVERSAL COLUMN
C.O.S = CONFIRM ON SITE
UBC = ULTIMATE BEARING CAPACITY
U/S = UNDERSIDE

## CONCRETE NOTES

1. CONCRETE CONSTRUCTION TO BE IN ACCORDANCE WITH NZS3109:1997 (CONCRETE CONSTRUCTION) AND REFERENCED DOCUMENTATION
2. MINIMUM CONCRETE TO BE 30MPa . 100mm SLUMP MIX WITH 19mmNOMINAL AGGREGATE SIZE. CONCRETE STRENGTHS ARE SPECIFIED 28 DAY COMPRESSIVE STRENGTHS AS DEFINED IN NZS 3109:1997.
3. PENETRATIONS ARE NOT PERMITTED THROUGH CONCRETE RIBS (FOUNDATIONS), BEAMS OR COLUMNS UNLESS SPECIFICALLY DETAILED IN THE ENGINEERING DRAWINGS.
4. RECOMMENDED STRUCTURAL CEMENT HIGH GRADE CEMENT TO NZS 3104:2003.
5. STRUCTURAL CONCRETE DEPTH DO NOT INCLUDE THE DEPTH OF FINISHES.
6. CONSTRUCTION JOINTS NOT SHOWN ON DRAWINGS SHALL BE LOCATED TO THE APPROVAL OF THE ENGINEER.
7. TEMPORARY PROPPING AND FORMWORK CONSTRUCTION FOR CONCRETE WORKS SHALL BE THE CONTRACTOR'S RESPONSIBILITY.
8. HD OR HIGH DUCTILE DEFORMED BARS MUST NOT BE BENT TWICE. IF BARS ARE REQUIRED TO BE BENT MORE THAN ONCE, HEATING IS REQUIRED FOR REBENDING. D OR DEFORMED BARS CAN BE BENT TWICE BUT CONTRACTOR MUST SEEK APPROVAL FROM THE STRUCTURAL ENGINEER FOR THE REPLACEMENT OF HD BARS.
9. BAR CLASSES:
   A) R: ROUND PLAIN, Fy = 300MPa
   B) HR: ROUND PLAIN, Fy = 500MPa
   C) D: DEFORMED, Fy = 300MPa
   D) HD: DEFORMED, Fy = 500MPa
10. REINFORCEMENT COVER (25MPa CONCRETE):
    A) 75mm BOTTOM COVER
    B) 50mm TOP & SIDE COVER
11. COVER TO BE MAINTAINED USING CHAIRS AT APPROXIMATELY 1500-2000mm CENTERS, ENSURING VARIATIONS TO SURFACES DO NOT DECREASE COVER. WHERE LEVELS ARE NOT FLAT SUCH AS FOUNDATIONS, COVER MUST BE MAINTAINED BY USING CHAIRS AT CLOSER CENTERS
12. SURFACE FINISHES U1 IN ACCORDANCE WITH NZS 3114

## REINFORCEMENT

1. STAGGER LAPS WHERE POSSIBLE. WHERE LAPS ARE NOT STAGGERED INCREASE LAP LENGTH BY 30%. WHERE GAPS BETWEEN LAP BARS EXIST, THE LAP LENGTH SHALL BE EXTENDED BY 1.5xGAP.
2. MINIMUM LAP FOR FABRIC SHALL BE ONE MESH BAR SPACING PLUS 50mm.
3. PLACING AND SPACING OF REINFORCEMENT
   a. SPLICING OF REINFORCEMENT, WHETHER BY LAPPING, WELDING OR MECHANICAL SPLICE SHALL ONLY BE CARRIED OUT AS SHOWN ON THE DRAWINGS OR AS SPECIFICALLY APPROVED BY THE ENGINEER.
      -WELDED WIRE MESH SHALL BE SPLICED AS REQUIRED, BUT NOT THROUGH SLAB JOINTS.
   b. ALL HOOKS ON STIRRUP AND TIES MUST FIT CLOSELY AROUND MAIN BARS U.N.O.FIRST STIRRUP TO BE PLACED NOT FURTHER THAN THE LESSER OF 1/2 STIRRUP SPACING OR 50mm FROM SUPPORT FACE. LAP SPLICES IN REINFORCEMENT
   c. LAP LENGTHS FOR DEFORMED BARS SHALL BE AS SHOWN IN THE FOLLOWING TABLES U.N.O.
      -TOP BAR FACTOR IS 1.0 FOR ALL VERTICAL BARS (COLUMNS, WALLS) AND FOR HORIZONTAL BARS WITH LESS THAN 300mm OF FRESH CONCRETE CAST BENEATH BAR (TYPICALLY BEAM BOTTOM BARS AND SLAB BARS). -
      TOP BAR FACTOR IS 1.3 FOR ALL HORIZONTAL BARS WITH MORE THAN 300mm OF FRESH CONCRETE CAST BENEATH THE BAR (TYPICALLY BEAM TOP BARS AND HORIZONTAL WALL BARS).
4. BARS ARE TO BE TO AS/NZS 4671 - GRADE 500E DEFORMED, OTHER THAN FOR TIES, STIRRUPS AND SPIRALS, THAT COULD BE MICRO ALLOY GRADE 300E U.N.O.

| 25 MPa | GRADE 300 DEFORMED | GRADE 500 DEFORMED |
|---|---|---|
| 12mm BAR | 500 | 700 |
| 16mm BAR | 600 | 900 |
| 20mm BAR | 700 | 1100 |
| 25mm BAR | 900 | 1400 |
| 32mm BAR | 1100 | 1700 |

| REV | ISSUE | Date |
|---|---|---|
| 1 | FOR CONSTRUCTION | 16.04.25 |
| 0 | FOR CONSTRUCTION | 01.11.24 |

DESIGNED: SK
CHECKED: SK/RR
DRAWN: AS

Contact SENZ when in doubt. Refer to Architectural Drawings for set out, do not scale Structural Engineering Drawings

Business Address: L1, 52 Highbrook Drive, East Tamaki, Auckland 2013
Phone Number: +64 9 275 6029
Evening Number: +64 9 889 9350
E-mail Address: info@structural-engs.co.nz
Website: www.structural-engs.co.nz

SENZ Structural Engineers New Zealand

CLIENT DEVAN

PROJECT
**DEVAN PLASTICS STANDARD DESIGN FOR UNDERGROUND TANKS**

FOR CONSTRUCTION

SHEET TITLE
**GENERAL NOTES 1**

SCALE NTS
Drawing No. **059-003 -G-001**
REVISION **1**

## TIES FOR BEAMS AND COLUMNS

1. SPLICING ADJACENT LENGTHS OF SPIRAL SHALL BE EITHER BY PROVIDING 135° STIRRUP HOOKS AS FOR CIRCULAR HOOPS, OR BY WELDED LAP SPLICES.
2. ANCHORAGE OF A SPIRAL BAR AT THE TERMINATION OF THE LENGTH OF THE SPIRAL SHALL BE PROVIDED BY AN EXTRA ONE-HALF TURN OF THE SPIRAL PLUS EITHER A 135° STIRRUP HOOK OR A WELDED LAP SPLICE TO THE PREVIOUS TURN, WELDED SPLICES IN SPIRALS SHALL COMPLY WITH PACIFIC STEEL LIMITED GENERAL INFORMATION SHEET G001.(WHICH SHALL TAKE PRECEDENCE) AND ALSO WITH NZS 4702:1982.
3. WELDED SPLICES IN COLUMN SPIRALS SHALL BE CLASS S. OTHER WELDED SPLICES IN SPIRALS SHALL BE CLASS A.
4. STIRRUP LAYOUTS:

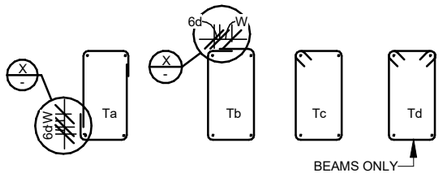


**TIES (T)**

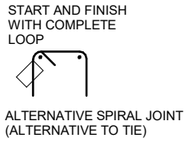


**SPIRAL (S)**

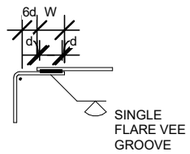


**DETAIL X**

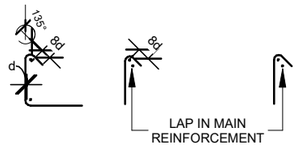


**TIE ANCHORAGE**

## BENDING OF REINFORCEMENT

BENDS FOR ALL BARS EXCEPT STIRRUPS AND TIES:

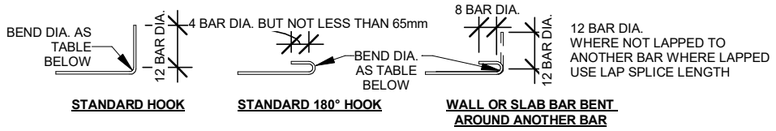


**STANDARD HOOK** **STANDARD 180° HOOK** **WALL OR SLAB BAR BENT AROUND ANOTHER BAR**

| STEEL GRADE | BAR DIA (mm) | MINIMUM DIA. OF BEND |
|---|---|---|
| GRADE 300E/500E | 6-20 | 4 BAR DIA. |
| GRADE 300E/500E | 25-40 | 6 BAR DIA. |

**NOTE:** CONC. DENOTES CONCRETE STRENGTH

BENDS FOR ALL BARS EXCEPT STIRRUPS AND TIES:

BEND DIA. EQUALS THAT OF ENCLOSED BAR BUT NOT LESS THAT SHOWN IN TABLE BELOW

| STEEL GRADE | BAR DIA (mm) | MINIMUM DIA. OF BEND | |
|---|---|---|---|
| | | PLAIN BARS | DEFORMED BARS |
| 300E/500E | 6-20 | 2 BAR DIA. | 4 BAR DIA. |
| 300E/500E | 25-40 | 3 BAR DIA. | 6 BAR DIA. |

STANDARD STIRRUP & TIE HOOKS

BARS PARTIALLY EMBEDDED IN CONCRETE SHALL NOT BE SITE BENT UNLESS SHOWN ON THE DRAWINGS OR SPECIFICALLY APPROVED BY THE ENGINEER.

45° BENDS FOR ALL BARS EXCEPT STIRRUPS & TIES

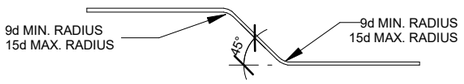


**45° CRANK**

| REV | ISSUE | Date |
|---|---|---|
| 1 | FOR CONSTRUCTION | 16.04.25 |
| 0 | FOR CONSTRUCTION | 01.11.24 |

DESIGNED: **SK**
CHECKED: **SK/RR**
DRAWN: **AS**

Contact SENZ when in doubt. Refer to Architectural Drawings for set out, do not scale Structural Engineering Drawings


Business Address: L1, 52 Highbrook Drive, East Tamaki, Auckland 2013
Phone Number: +64 9 275 6029
Evening Number: +64 9 889 9350
E-mail Address: info@structural-engs.co.nz
Website: www.structural-engs.co.nz


SENZ Structural Engineers New Zealand

CLIENT DEVAN

PROJECT
**DEVAN PLASTICS STANDARD DESIGN FOR UNDERGROUND TANKS**

FOR CONSTRUCTION

SHEET TITLE
**GENERAL NOTES 2**

SCALE NTS

Drawing No. **059-003 -G-002**

REVISION **1**

NOTE:
stormVAULT 800mm TANKS MAY BE DIRECTLY SUBSTITUTED WITH THE stormVAULT 1200mm TANKS, PROVIDED ALL DIMENSIONAL CONSTRAINTS IN THESE DRAWINGS ARE FOLLOWED.

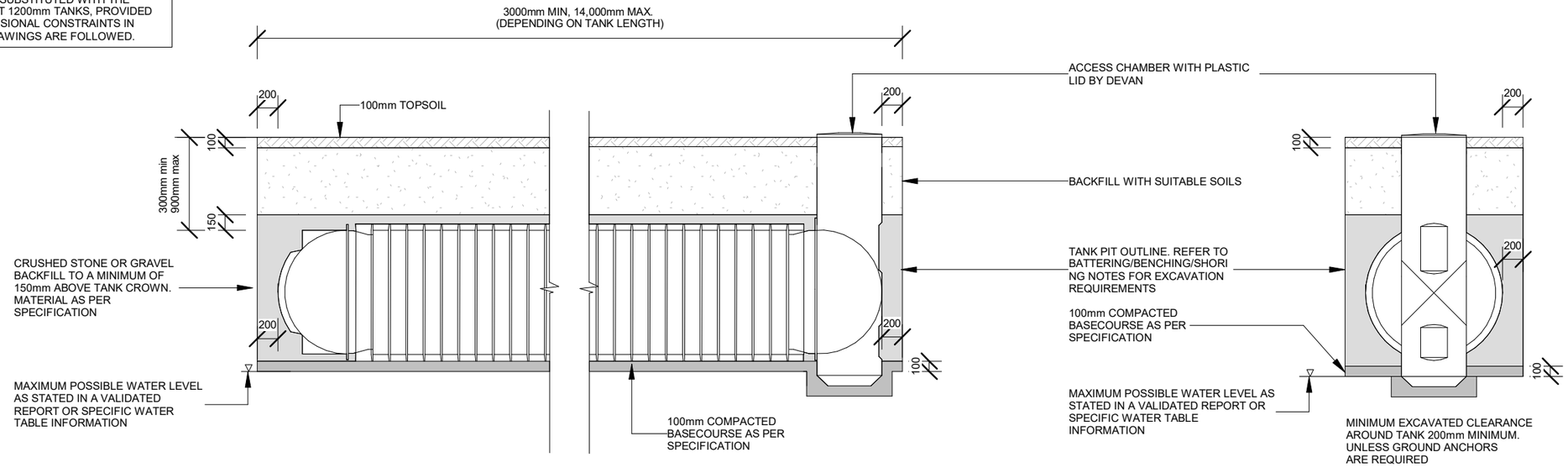


**NOTE:**
NO TRAFFIC LOADING IS ALLOWED OVER THE TANK

## 1 1200mm DIAMETER TANK TYPICAL INSTALLATION

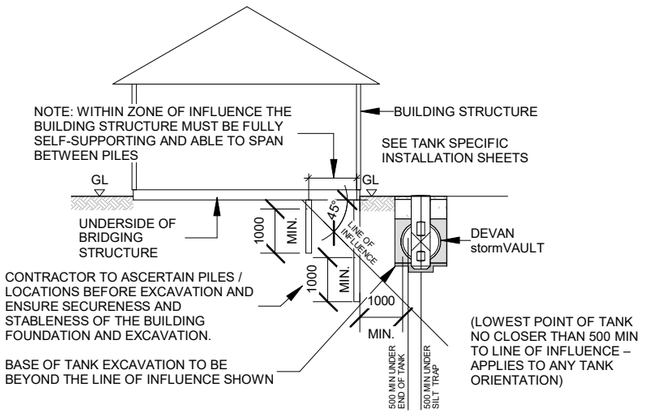


## 2 TANK PLACEMENT NEAR PILED FOUNDATIONS

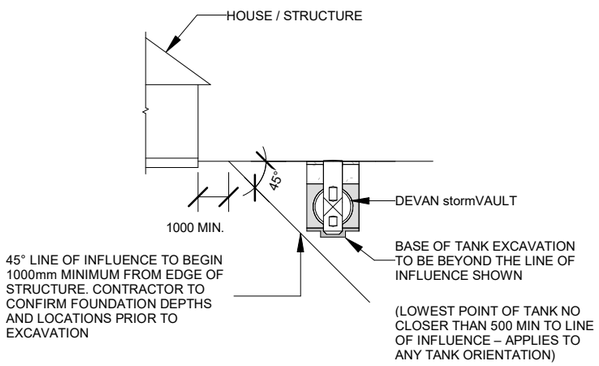


## 3 TANK PLACEMENT NEAR BUILDING STRUCTURE

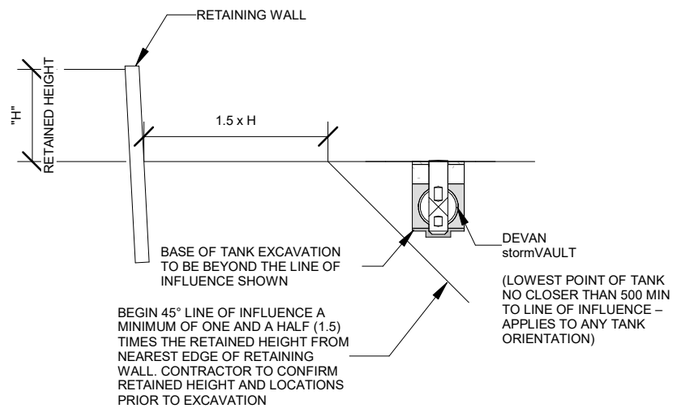


## 4 TANK PLACEMENT NEAR RETAINING WALL

NOTES:
- ALL DIMENSIONS IN MILLIMETRES UNO
- REFER TO STRUCTURAL SPECIFICATIONS SHEET OR CONCRETE REINFORCING & OTHER NOTES
- ALL LEVELS SHALL BE CONFIRMED BY THE CONTRACTOR PRIOR TO COMMENCEMENT OF WORK.
- ALL UNDERGROUND SERVICES SHALL BE CONFIRMED, LOCATED AND MARKED PRIOR TO ANY EXCAVATION WORKS,

- DEVAN PLASTICS LTD SHALL BE NOTIFIED IMMEDIATELY SHOULD ANY OF THE DESIGN PARAMETERS SHOWN ON THE DRAWINGS NOT BE ACHIEVABLE.

- REFER TO DEVAN PLASTICS LTD FOR MAXIMUM BURIAL DEPTH ALLOWANCES.

- TEMPORARY SUPPORT AND SHORING TO BE CARRIED OUT IN ACCORDANCE WITH WORKSAFE EXCAVATION SAFETY GUIDELINES.

- stormVAULT INSTALLATION TO BE CARRIED OUT IN CONJUCTION WITH DEVAN PRODUCT INFORMATION GUIDE AND THESE DRAWINGS

SOIL CONDITIONS:
SITE SOIL CONDITIONS ALLOW FOR EXPANSIVE SOIL UP TO AND INCLUDING CLASS H2 AS DEFINED IN AS2870, PROVIDED AN ULTIMATE BEARING CAPACITY OF 300 KPA IS ACHIEVABLE. NO ALLOWANCE FOR LIQUIFIABLE SOIL, OR SOIL WITH SLOPE STABILITY ISSUES. IT IS THE RESPONSIBILITY OF THE CONTRACTOR AND THE OWNER TO VERIFY THE SITE CONDITIONS PRIOR TO COMMENCING THE CONSTRUCTION WORKS.

TANK LOCATION - PROXIMITY TO NEARBY STRUCTURES:
IT IS THE CONTRACTOR AND OWNER'S RESPONSIBILITY TO ENSURE THAT THE LOCATION OF THE TANK WITH RESPECT TO ADJACENT STRUCTURES COMPLY WITH THE LIMITS AND RESTRICTIONS SET OUT IN THESE DRAWINGS. DEVAN PLASTICS LTD SHALL BE NOTIFIED IMMEDIATELY IF THOSE LIMITS ARE NOT ACHIEVABLE.

BACKFILL AND BASECOURSE:
GAP 10 or GAP 20 SHALL BE USED FOR BACKFILL AND BASECOURSE MATERIAL. ALTERNATIVE MATERIAL SHALL NOT BE USED WITHOUT THE WRITTEN APPROVAL OF DEVAN PLASTICS LTD.

CONTRACTOR SHALL BACKFILL LIFTS OF 150MM. THE CONTRACTOR SHALL USE THE APPROPRIATE TOOLS AND CONSTRUCTION TECHNIQUES TO ENSURE ALL VOIDS ARE FILLED ALONG THE FULL LENGTH OF THE TANK, ENSURING SUFFICIENT SUPPORT.

BATTERING/BENCHING/SHORING:
MANAGING THE STABILITY OF THE TRENCH DURING EXCAVATION IS THE RESPONSIBILITY OF THE CONTRACTOR, AND SHALL BE CARRIED OUT WITH THE RELEVANT GUIDELINES AND BEST PRACTICES IN ACCORDANCE WITH THE HEALTH AND SAFETY AT WORK ACT 2015. THIS INCLUDES, BUT NOT LIMITED TO, ANY EXCAVATIONS DEEPER THAN 1.5M. THE CONTRACTOR SHALL CONSULT WITH SUITABLE INDUSTRY PROFESIONALS SHOULD FURTHER GUIDANCE BE REQUIRED FOR BENCHING, BATTERING AND SHORING.

NOTE:
THIS SHEET IS FOR THE INSTALLATION OF TANKS ABOVE MAXIMUM POSSIBLE WATER TABLE LEVELS OR FOR INSTALLATIONS NOT REQUIRING ANCHOR PADS AS DETERMINED THROUGH "DEVAN PLASTICS stormVAULT UNDERGROUND CYLINDRICAL TANKS TOOLBOX VERSION 1.0 (OR HIGHER) CALCULATOR". IF TANKS ARE BEING INSTALLED ABOVE MAXIMUM POSSIBLE WATER TABLE LEVELS THEN SITE SPECIFIC REPORTS OR WATER TABLE INFORMATION MUST PROVE THE WATER LEVEL CAN NOT POSSIBLY RISE ABOVE THE BOTTOM OF THE EXCAVATION. IF THIS INFORMATION CAN NOT BE PROVIDED, REFER TO SHEET 059-003-S-002. IT IS THE RESPONSIBILITY OF THE CONTRACTOR AND OWNER TO ENSURE CORRECT TANK INSTALLATION IN ACCORDANCE WITH THE DEVAN INSTALLATION GUIDES AND DRAWINGS.

| REV | ISSUE | Date |
|---|---|---|
| 1 | FOR CONSTRUCTION | 16.04.25 |
| 0 | FOR CONSTRUCTION | 01.11.24 |

| | | |
|---|---|---|
| DESIGNED | SK | Contact SENZ when in doubt. Refer to Architectural Drawings for set out, do not scale Structural Engineering Drawings |
| CHECKED | SK/RR | Business Address: L1, 52 Highbrook Drive, East Tamaki, Auckland 2013 |
| DRAWN | AS | Phone Number: +64 9 275 6029<br>Evening Number: +64 9 889 9350<br>E-mail Address: info@structural-engs.co.nz<br>Website: www.structural-engs.co.nz |

SENZ Structural Engineers New Zealand

CLIENT DEVAN

PROJECT
**DEVAN PLASTICS STANDARD DESIGN FOR UNDERGROUND TANKS**

SHEET TITLE
**NON-TRAFFICABLE SINGLE TANK INSTALLATION INSTRUCTIONS WITHOUT ANCHORS**

FOR CONSTRUCTION

SCALE 1 : 50 @ A3 / 1:A3x2 @ A1

Drawing No. 059-003 -S-001

REVISION 1

NOTE:
stormVAULT 800mm TANKS MAY BE DIRECTLY SUBSTITUTED WITH THE stormVAULT 1200mm TANKS, PROVIDED ALL DIMENSIONAL CONSTRAINTS IN THESE DRAWINGS ARE FOLLOWED.

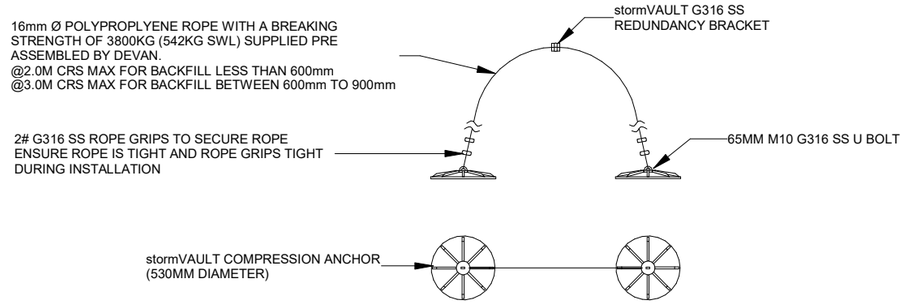


1 S-002 **DETAIL**

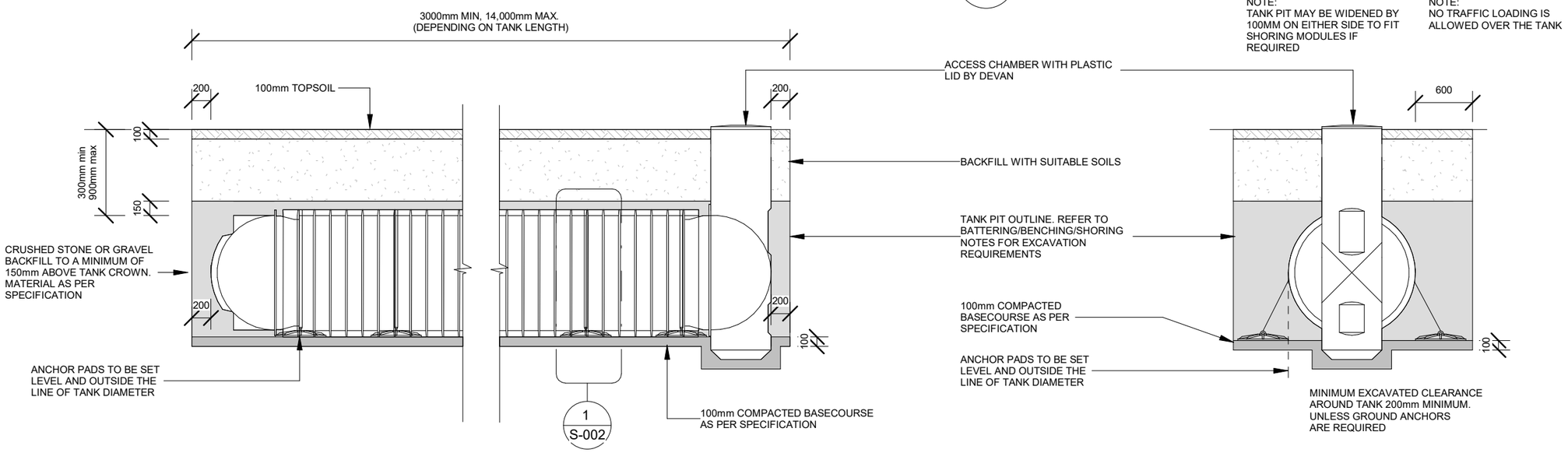


2 **1200mm DIAMETER TANK ANCHORED INSTALLATION**

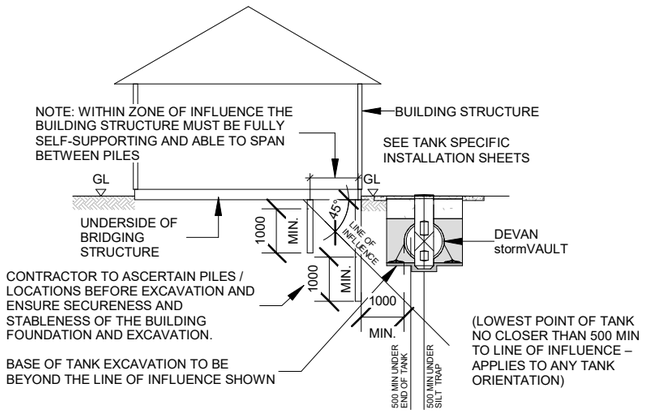


3 **TANK PLACEMENT NEAR PILED FOUNDATIONS**

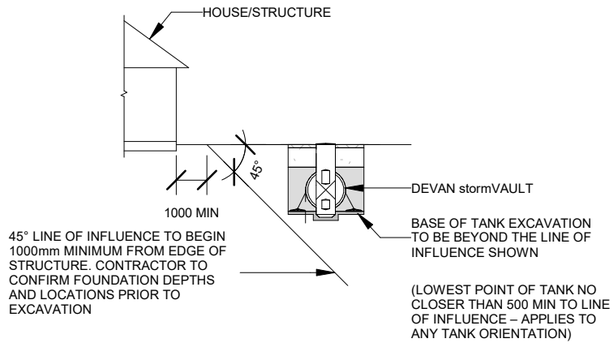


4 **TANK PLACEMENT NEAR BUILDING STRUCTURE**

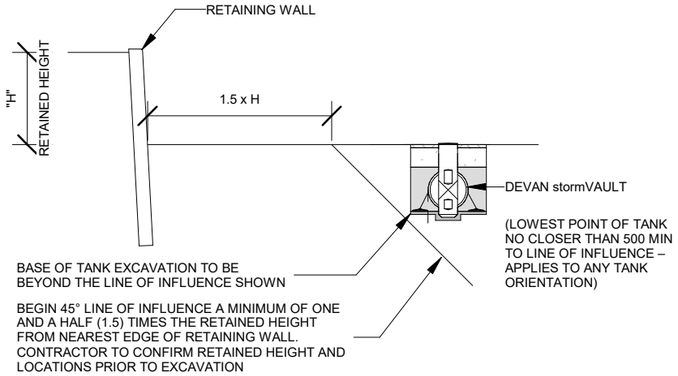


5 **TANK PLACEMENT NEAR RETAINING WALL**

NOTES:
- ALL DIMENSIONS IN MILLIMETRES UNO
- REFER TO STRUCTURAL SPECIFICATIONS SHEET OR CONCRETE REINFORCING & OTHER NOTES
- ALL LEVELS SHALL BE CONFIRMED BY THE CONTRACTOR PRIOR TO COMMENCEMENT OF WORK.
- ALL UNDERGROUND SERVICES SHALL BE CONFIRMED, LOCATED AND MARKED PRIOR TO ANY EXCAVATION WORKS,

- DEVAN PLASTICS LTD SHALL BE NOTIFIED IMMEDIATELY SHOULD ANY OF THE DESIGN PARAMETERS SHOWN ON THE DRAWINGS NOT BE ACHIEVABLE.

- REFER TO DEVAN PLASTICS LTD FOR MAXIMUM BURIAL DEPTH ALLOWANCES.

- TEMPORARY SUPPORT AND SHORING TO BE CARRIED OUT IN ACCORDANCE WITH WORKSAFE EXCAVATION SAFETY GUIDELINES.

- stormVAULT INSTALLATION TO BE CARRIED OUT IN CONJUCTION WITH DEVAN PRODUCT INFORMATION GUIDE AND THESE DRAWINGS

SOIL CONDITIONS:
SITE SOIL CONDITIONS ALLOW FOR EXPANSIVE SOIL UP TO AND INCLUDING CLASS H2 AS DEFINED IN AS2870, PROVIDED AN ULTIMATE BEARING CAPACITY OF 300 KPA IS ACHIEVABLE. NO ALLOWANCE FOR LIQUIFIABLE SOIL, OR SOIL WITH SLOPE STABILITY ISSUES. IT IS THE RESPONSIBILITY OF THE CONTRACTOR AND THE OWNER TO VERIFY THE SITE CONDITIONS PRIOR TO COMMENCING THE CONSTRUCTION WORKS.

TANK LOCATION - PROXIMITY TO NEARBY STRUCTURES:
IT IS THE CONTRACTOR AND OWNER'S RESPONSIBILITY TO ENSURE THAT THE LOCATION OF THE TANK WITH RESPECT TO ADJACENT STRUCTURES COMPLY WITH THE LIMITS AND RESTRICTIONS SET OUT IN THESE DRAWINGS. DEVAN PLASTICS LTD SHALL BE NOTIFIED IMMEDIATELY IF THOSE LIMITS ARE NOT ACHIEVABLE.

BACKFILL AND BASECOURSE:
GAP 10 or GAP 20 SHALL BE USED FOR BACKFILL AND BASECOURSE MATERIAL. ALTERNATIVE MATERIAL SHALL NOT BE USED WITHOUT THE WRITTEN APPROVAL OF DEVAN PLASTICS LTD.

CONTRACTOR SHALL BACKFILL LIFTS OF 150MM. THE CONTRACTOR SHALL USE THE APPROPRIATE TOOLS AND CONSTRUCTION TECHNIQUES TO ENSURE ALL VOIDS ARE FILLED ALONG THE FULL LENGTH OF THE TANK, ENSURING SUFFICIENT SUPPORT.

BATTERING/BENCHING/SHORING:
MANAGING THE STABILITY OF THE TRENCH DURING EXCAVATION IS THE RESPONSIBILITY OF THE CONTRACTOR, AND SHALL BE CARRIED OUT WITH THE RELEVANT GUIDELINES AND BEST PRACTICES IN ACCORDANCE WITH THE HEALTH AND SAFETY AT WORK ACT 2015. THIS INCLUDES, BUT NOT LIMITED TO, ANY EXCAVATIONS DEEPER THAN 1.5M. THE CONTRACTOR SHALL CONSULT WITH SUITABLE INDUSTRY PROFESIONALS SHOULD FURTHER GUIDANCE BE REQUIRED FOR BENCHING, BATTERING AND SHORING.

NOTE:
THIS SHEET IS FOR THE INSTALLATION OF TANKS REQUIRING ANCHOR PADS AS DETERMINED THROUGH "DEVAN PLASTICS stormVAULT UNDERGROUND CYLINDRICAL TANKS TOOLBOX VERSION 1.0 (OR HIGHER) CALCULATOR". IT IS THE RESPONSIBILITY OF THE CONTRACTOR AND OWNER TO ENSURE CORRECT TANK INSTALLATION IN ACCORDANCE WITH THE DEVAN INSTALLATION GUIDES AND DRAWINGS.

| REV | ISSUE | Date |
|---|---|---|
| 1 | FOR CONSTRUCTION | 16.04.25 |
| 0 | FOR CONSTRUCTION | 01.11.24 |

| | |
|---|---|
| DESIGNED | SK |
| CHECKED | SK/RR |
| DRAWN | AS |

Contact SENZ when in doubt. Refer to Architectural Drawings for set out, do not scale Structural Engineering Drawings


Business Address: L1, 52 Highbrook Drive, East Tamaki, Auckland 2013
Phone Number: +64 9 275 6029
Evening Number: +64 9 889 9350
E-mail Address: info@structural-engs.co.nz
Website: www.structural-engs.co.nz
SENZ Structural Engineers New Zealand


CLIENT DEVAN

PROJECT
**DEVAN PLASTICS STANDARD DESIGN FOR UNDERGROUND TANKS**

FOR CONSTRUCTION

SHEET TITLE
**NON-TRAFFICABLE SINGLE TANK INSTALLATION INSTRUCTIONS WITH ANCHORS**

SCALE 1 : 50 @ A3 / 1:A3x2 @ A1

Drawing No. **059-003 -S-002**

REVISION **1**

NOTE:
stormVAULT 800mm TANKS MAY BE DIRECTLY SUBSTITUTED WITH THE stormVAULT 1200mm TANKS, PROVIDED ALL DIMENSIONAL CONSTRAINTS IN THESE DRAWINGS ARE FOLLOWED.

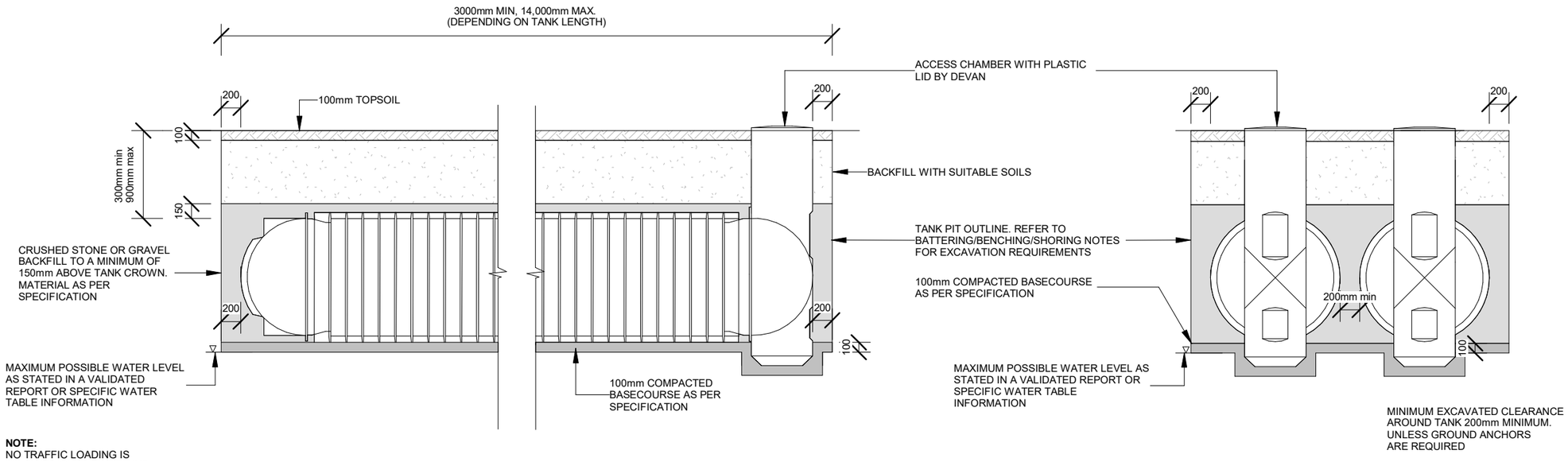


**NOTE:**
NO TRAFFIC LOADING IS ALLOWED OVER THE TANKS

1 **1200mm DIAMETER TANK TYPICAL INSTALLATION**

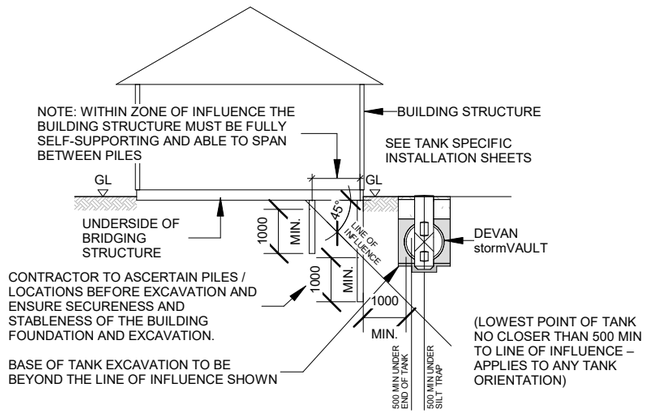


3 **TANK PLACEMENT NEAR PILED FOUNDATIONS**

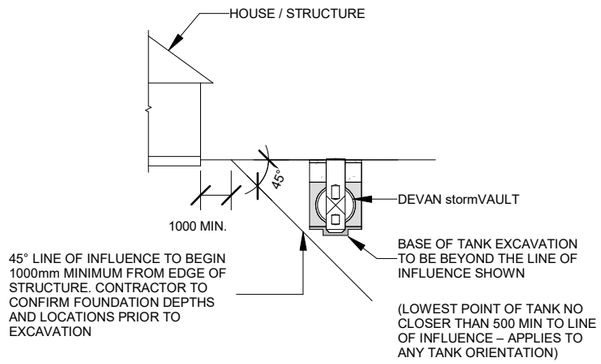


4 **TANK PLACEMENT NEAR BUILDING STRUCTURE**

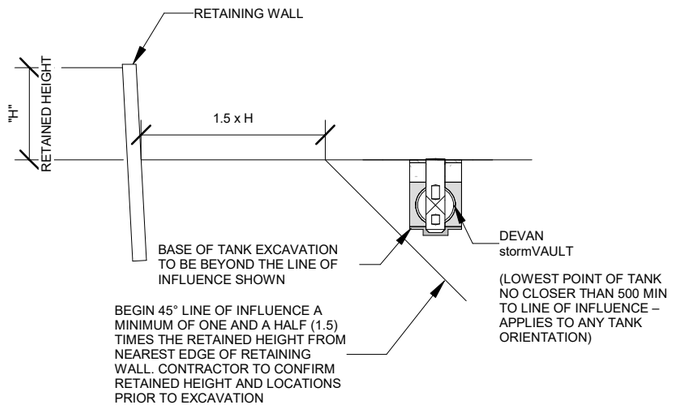


5 **TANK PLACEMENT NEAR RETAINING WALL**

NOTES:
- ALL DIMENSIONS IN MILLIMETRES UNO
- REFER TO STRUCTURAL SPECIFICATIONS SHEET OR CONCRETE REINFORCING & OTHER NOTES
- ALL LEVELS SHALL BE CONFIRMED BY THE CONTRACTOR PRIOR TO COMMENCEMENT OF WORK.
- ALL UNDERGROUND SERVICES SHALL BE CONFIRMED, LOCATED AND MARKED PRIOR TO ANY EXCAVATION WORKS,

- DEVAN PLASTICS LTD SHALL BE NOTIFIED IMMEDIATELY SHOULD ANY OF THE DESIGN PARAMETERS SHOWN ON THE DRAWINGS NOT BE ACHIEVABLE.

- REFER TO DEVAN PLASTICS LTD FOR MAXIMUM BURIAL DEPTH ALLOWANCES.

- TEMPORARY SUPPORT AND SHORING TO BE CARRIED OUT IN ACCORDANCE WITH WORKSAFE EXCAVATION SAFETY GUIDELINES.

- stormVAULT INSTALLATION TO BE CARRIED OUT IN CONJUCTION WITH DEVAN PRODUCT INFORMATION GUIDE AND THESE DRAWINGS

SOIL CONDITIONS:
SITE SOIL CONDITIONS ALLOW FOR EXPANSIVE SOIL UP TO AND INCLUDING CLASS H2 AS DEFINED IN AS2870, PROVIDED AN ULTIMATE BEARING CAPACITY OF 300 KPA IS ACHIEVABLE. NO ALLOWANCE FOR LIQUIFIABLE SOIL, OR SOIL WITH SLOPE STABILITY ISSUES. IT IS THE RESPONSIBILITY OF THE CONTRACTOR AND THE OWNER TO VERIFY THE SITE CONDITIONS PRIOR TO COMMENCING THE CONSTRUCTION WORKS.

TANK LOCATION - PROXIMITY TO NEARBY STRUCTURES:
IT IS THE CONTRACTOR AND OWNER'S RESPONSIBILITY TO ENSURE THAT THE LOCATION OF THE TANK WITH RESPECT TO ADJACENT STRUCTURES COMPLY WITH THE LIMITS AND RESTRICTIONS SET OUT IN THESE DRAWINGS. DEVAN PLASTICS LTD SHALL BE NOTIFIED IMMEDIATELY IF THOSE LIMITS ARE NOT ACHIEVABLE.

BACKFILL AND BASECOURSE:
GAP 10 or GAP 20 SHALL BE USED FOR BACKFILL AND BASECOURSE MATERIAL. ALTERNATIVE MATERIAL SHALL NOT BE USED WITHOUT THE WRITTEN APPROVAL OF DEVAN PLASTICS LTD.

CONTRACTOR SHALL BACKFILL LIFTS OF 150MM. THE CONTRACTOR SHALL USE THE APPROPRIATE TOOLS AND CONSTRUCTION TECHNIQUES TO ENSURE ALL VOIDS ARE FILLED ALONG THE FULL LENGTH OF THE TANK, ENSURING SUFFICIENT SUPPORT.

BATTERING/BENCHING/SHORING:
MANAGING THE STABILITY OF THE TRENCH DURING EXCAVATION IS THE RESPONSIBILITY OF THE CONTRACTOR, AND SHALL BE CARRIED OUT WITH THE RELEVANT GUIDELINES AND BEST PRACTICES IN ACCORDANCE WITH THE HEALTH AND SAFETY AT WORK ACT 2015. THIS INCLUDES, BUT NOT LIMITED TO, ANY EXCAVATIONS DEEPER THAN 1.5M. THE CONTRACTOR SHALL CONSULT WITH SUITABLE INDUSTRY PROFESIONALS SHOULD FURTHER GUIDANCE BE REQUIRED FOR BENCHING, BATTERING AND SHORING.

NOTE:
THIS SHEET IS FOR THE INSTALLATION OF TANKS ABOVE MAXIMUM POSSIBLE WATER TABLE LEVELS OR FOR INSTALLATIONS NOT REQUIRING ANCHOR PADS AS DETERMINED THROUGH "DEVAN PLASTICS stormVAULT UNDERGROUND CYLINDRICAL TANKS TOOLBOX VERSION 1.0 (OR HIGHER) CALCULATOR". IF TANKS ARE BEING INSTALLED ABOVE MAXIMUM POSSIBLE WATER TABLE LEVELS THEN SITE SPECIFIC REPORTS OR WATER TABLE INFORMATION MUST PROVE THE WATER LEVEL CAN NOT POSSIBLY RISE ABOVE THE BOTTOM OF THE EXCAVATION. IF THIS INFORMATION CAN NOT BE PROVIDED, REFER TO SHEET 059-003-S-004. IT IS THE RESPONSIBILITY OF THE CONTRACTOR AND OWNER TO ENSURE CORRECT TANK INSTALLATION IN ACCORDANCE WITH THE DEVAN INSTALLATION GUIDES AND DRAWINGS.

| REV | ISSUE | Date |
|---|---|---|
| 1 | FOR CONSTRUCTION | 16.04.25 |
| 0 | FOR CONSTRUCTION | 01.11.24 |

| | | |
|---|---|---|
| DESIGNED | SK | Contact SENZ when in doubt. Refer to Architectural Drawings for set out, do not scale Structural Engineering Drawings |
| CHECKED | SK/RR | Business Address: L1, 52 Highbrook Drive, East Tamaki, Auckland 2013<br>Phone Number: +64 9 275 6029<br>Evening Number: +64 9 889 9350<br>E-mail Address: info@structural-engs.co.nz<br>Website: www.structural-engs.co.nz |
| DRAWN | AS | |

SENZ Structural Engineers New Zealand

CLIENT DEVAN

PROJECT
**DEVAN PLASTICS STANDARD DESIGN FOR UNDERGROUND TANKS**

SHEET TITLE
**NON-TRAFFICABLE DOUBLE TANK INSTALLATION INSTRUCTIONS WITHOUT ANCHORS**

FOR CONSTRUCTION

| SCALE | Drawing No. | REVISION |
|---|---|---|
| 1 : 50 @ A3<br>1:A3x2 @ A1 | 059-003 -S-003 | 1 |

NOTE:
stormVAULT 800mm TANKS MAY BE DIRECTLY SUBSTITUTED WITH THE stormVAULT 1200mm TANKS, PROVIDED ALL DIMENSIONAL CONSTRAINTS IN THESE DRAWINGS ARE FOLLOWED.

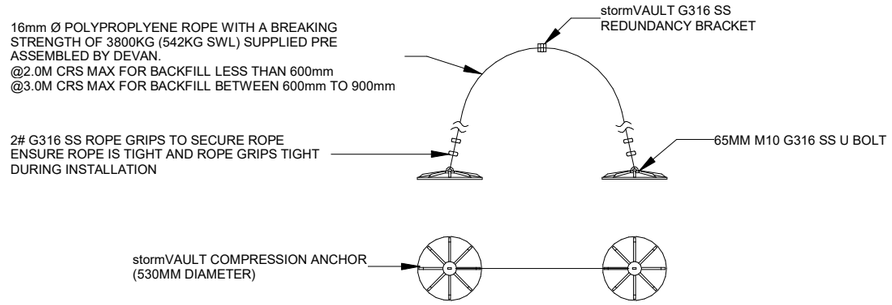


1 / S-004 **DETAIL**

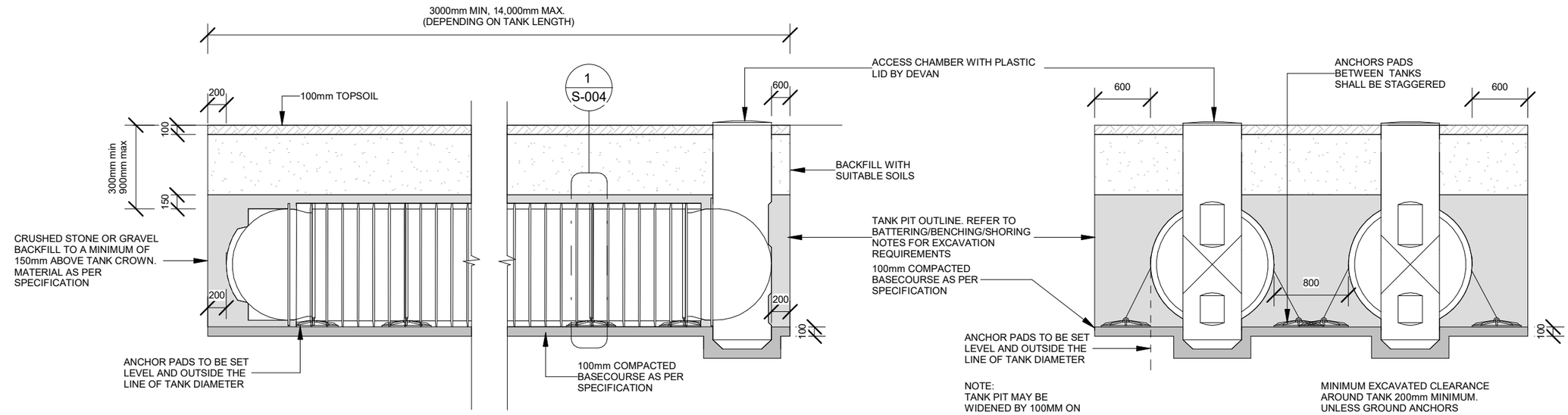


2 **1200mm DIAMETER TANK TYPICAL INSTALLATION**

**NOTE:**
NO TRAFFIC LOADING IS ALLOWED OVER THE TANKS

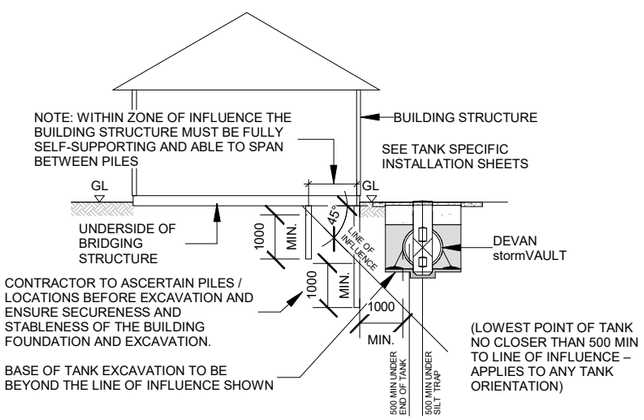


3 **TANK PLACEMENT NEAR PILED FOUNDATIONS**

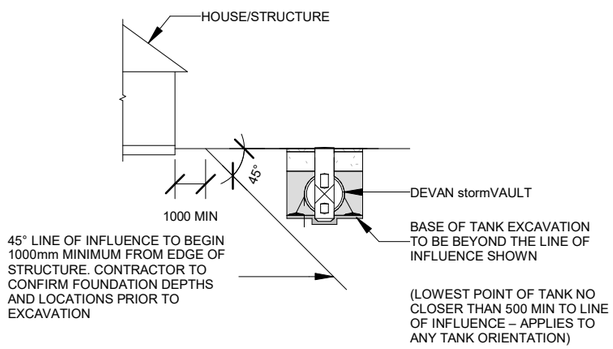


4 **TANK PLACEMENT NEAR BUILDING STRUCTURE**

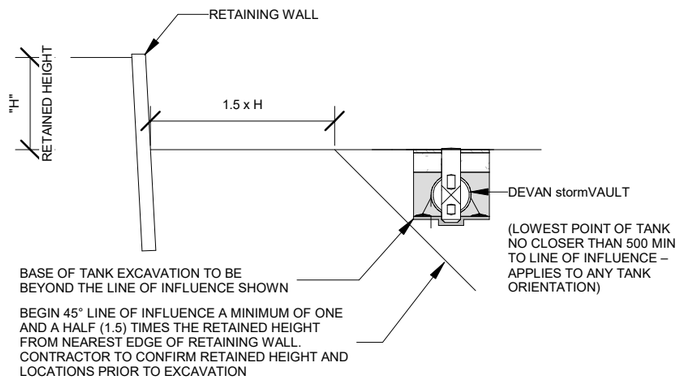


5 **TANK PLACEMENT NEAR RETAINING WALL**

NOTES:
- ALL DIMENSIONS IN MILLIMETRES UNO
- REFER TO STRUCTURAL SPECIFICATIONS SHEET OR CONCRETE REINFORCING & OTHER NOTES
- ALL LEVELS SHALL BE CONFIRMED BY THE CONTRACTOR PRIOR TO COMMENCEMENT OF WORK.
- ALL UNDERGROUND SERVICES SHALL BE CONFIRMED, LOCATED AND MARKED PRIOR TO ANY EXCAVATION WORKS,

- DEVAN PLASTICS LTD SHALL BE NOTIFIED IMMEDIATELY SHOULD ANY OF THE DESIGN PARAMETERS SHOWN ON THE DRAWINGS NOT BE ACHIEVABLE.

- REFER TO DEVAN PLASTICS LTD FOR MAXIMUM BURIAL DEPTH ALLOWANCES.

- TEMPORARY SUPPORT AND SHORING TO BE CARRIED OUT IN ACCORDANCE WITH WORKSAFE EXCAVATION SAFETY GUIDELINES.

- stormVAULT INSTALLATION TO BE CARRIED OUT IN CONJUCTION WITH DEVAN PRODUCT INFORMATION GUIDE AND THESE DRAWINGS

SOIL CONDITIONS:
SITE SOIL CONDITIONS ALLOW FOR EXPANSIVE SOIL UP TO AND INCLUDING CLASS H2 AS DEFINED IN AS2870, PROVIDED AN ULTIMATE BEARING CAPACITY OF 300 KPA IS ACHIEVABLE. NO ALLOWANCE FOR LIQUIFIABLE SOIL, OR SOIL WITH SLOPE STABILITY ISSUES. IT IS THE RESPONSIBILITY OF THE CONTRACTOR AND THE OWNER TO VERIFY THE SITE CONDITIONS PRIOR TO COMMENCING THE CONSTRUCTION WORKS.

TANK LOCATION - PROXIMITY TO NEARBY STRUCTURES:
IT IS THE CONTRACTOR AND OWNER'S RESPONSIBILITY TO ENSURE THAT THE LOCATION OF THE TANK WITH RESPECT TO ADJACENT STRUCTURES COMPLY WITH THE LIMITS AND RESTRICTIONS SET OUT IN THESE DRAWINGS. DEVAN PLASTICS LTD SHALL BE NOTIFIED IMMEDIATELY IF THOSE LIMITS ARE NOT ACHIEVABLE.

BACKFILL AND BASECOURSE:
GAP 10 or GAP 20 SHALL BE USED FOR BACKFILL AND BASECOURSE MATERIAL. ALTERNATIVE MATERIAL SHALL NOT BE USED WITHOUT THE WRITTEN APPROVAL OF DEVAN PLASTICS LTD.

CONTRACTOR SHALL BACKFILL LIFTS OF 150MM. THE CONTRACTOR SHALL USE THE APPROPRIATE TOOLS AND CONSTRUCTION TECHNIQUES TO ENSURE ALL VOIDS ARE FILLED ALONG THE FULL LENGTH OF THE TANK, ENSURING SUFFICIENT SUPPORT.

BATTERING/BENCHING/SHORING:
MANAGING THE STABILITY OF THE TRENCH DURING EXCAVATION IS THE RESPONSIBILITY OF THE CONTRACTOR, AND SHALL BE CARRIED OUT WITH THE RELEVANT GUIDELINES AND BEST PRACTICES IN ACCORDANCE WITH THE HEALTH AND SAFETY AT WORK ACT 2015. THIS INCLUDES, BUT NOT LIMITED TO, ANY EXCAVATIONS DEEPER THAN 1.5M. THE CONTRACTOR SHALL CONSULT WITH SUITABLE INDUSTRY PROFESIONALS SHOULD FURTHER GUIDANCE BE REQUIRED FOR BENCHING, BATTERING AND SHORING.

NOTE:
THIS SHEET IS FOR THE INSTALLATION OF TANKS REQUIRING ANCHOR PADS AS DETERMINED THROUGH "DEVAN PLASTICS stormVAULT UNDERGROUND CYLINDRICAL TANKS TOOLBOX VERSION 1.0 (OR HIGHER) CALCULATOR". IT IS THE RESPONSIBILITY OF THE CONTRACTOR AND OWNER TO ENSURE CORRECT TANK INSTALLATION IN ACCORDANCE WITH THE DEVAN INSTALLATION GUIDES AND DRAWINGS.

| REV | ISSUE | Date |
|---|---|---|
| 1 | FOR CONSTRUCTION | 16.04.25 |
| 0 | FOR CONSTRUCTION | 01.11.24 |

| | |
|---|---|
| DESIGNED | SK |
| CHECKED | SK/RR |
| DRAWN | AS |

Contact SENZ when in doubt. Refer to Architectural Drawings for set out, do not scale Structural Engineering Drawings


Business Address: L1, 52 Highbrook Drive, East Tamaki, Auckland 2013
Phone Number: +64 9 275 6029
Evening Number: +64 9 889 9350
E-mail Address: info@structural-engs.co.nz
Website: www.structural-engs.co.nz
SENZ Structural Engineers New Zealand


CLIENT
DEVAN

PROJECT
**DEVAN PLASTICS STANDARD DESIGN FOR UNDERGROUND TANKS**

SHEET TITLE
**NON-TRAFFICABLE DOUBLE TANK INSTALLATION INSTRUCTIONS WITH ANCHORS**

FOR CONSTRUCTION

| SCALE | Drawing No. | REVISION |
|---|---|---|
| 1 : 50 @ A3<br>1:A3x2 @ A1 | 059-003 -S-004 | 1 |

NOTE:
stormVAULT 800mm TANKS MAY BE DIRECTLY SUBSTITUTED WITH THE stormVAULT 1200mm TANKS, PROVIDED ALL DIMENSIONAL CONSTRAINTS IN THESE DRAWINGS ARE FOLLOWED.

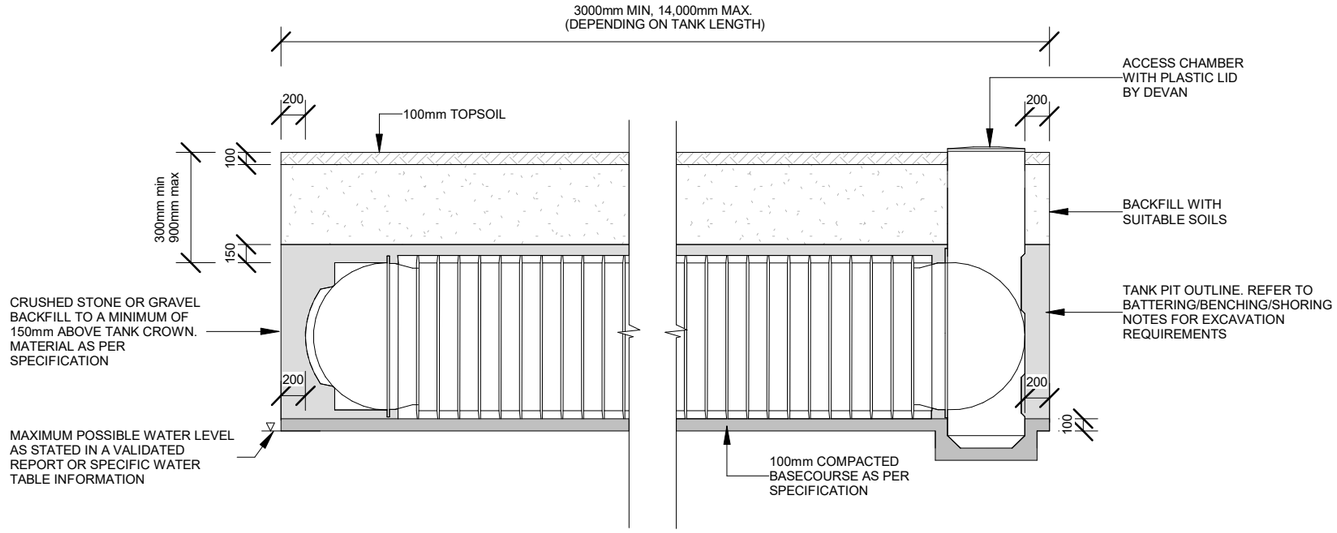


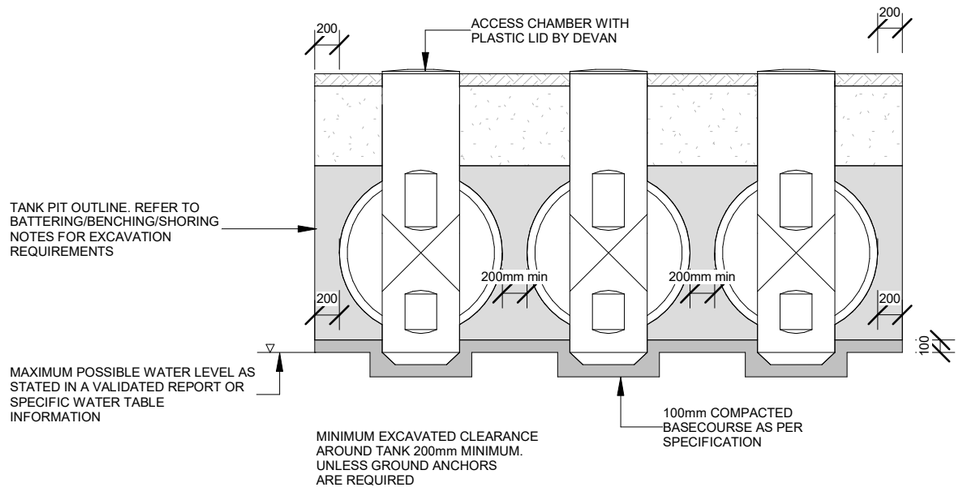


**NOTE:**
NO TRAFFIC LOADING IS ALLOWED OVER THE TANKS

1 **1200mm DIAMETER TANK TYPICAL INSTALLATION**

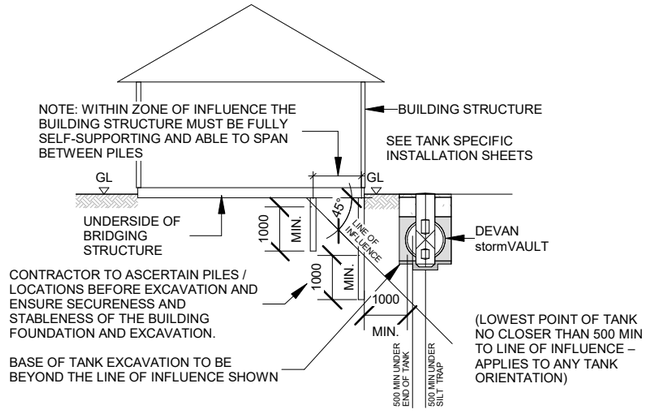


2 **TANK PLACEMENT NEAR PILED FOUNDATIONS**

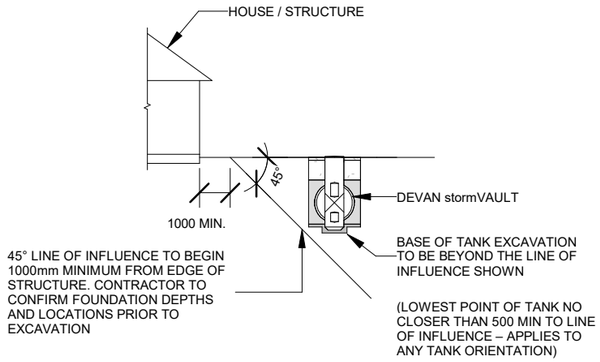


3 **TANK PLACEMENT NEAR BUILDING STRUCTURE**

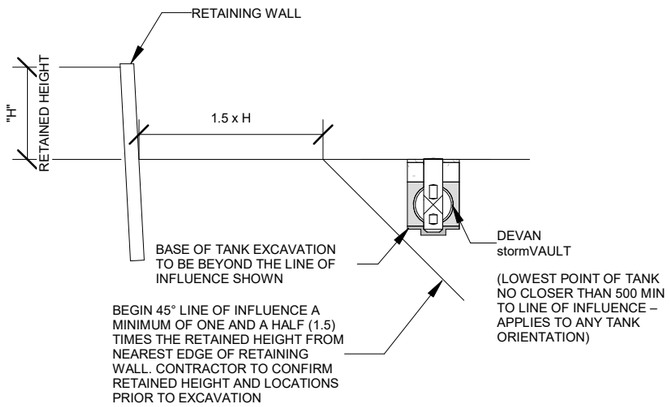


4 **TANK PLACEMENT NEAR RETAINING WALL**

NOTES:
- ALL DIMENSIONS IN MILLIMETRES UNO
- REFER TO STRUCTURAL SPECIFICATIONS SHEET OR CONCRETE REINFORCING & OTHER NOTES
- ALL LEVELS SHALL BE CONFIRMED BY THE CONTRACTOR PRIOR TO COMMENCEMENT OF WORK.
- ALL UNDERGROUND SERVICES SHALL BE CONFIRMED, LOCATED AND MARKED PRIOR TO ANY EXCAVATION WORKS,

- DEVAN PLASTICS LTD SHALL BE NOTIFIED IMMEDIATELY SHOULD ANY OF THE DESIGN PARAMETERS SHOWN ON THE DRAWINGS NOT BE ACHIEVABLE.

- REFER TO DEVAN PLASTICS LTD FOR MAXIMUM BURIAL DEPTH ALLOWANCES.

- TEMPORARY SUPPORT AND SHORING TO BE CARRIED OUT IN ACCORDANCE WITH WORKSAFE EXCAVATION SAFETY GUIDELINES.

- stormVAULT INSTALLATION TO BE CARRIED OUT IN CONJUCTION WITH DEVAN PRODUCT INFORMATION GUIDE AND THESE DRAWINGS

SOIL CONDITIONS:
SITE SOIL CONDITIONS ALLOW FOR EXPANSIVE SOIL UP TO AND INCLUDING CLASS H2 AS DEFINED IN AS2870, PROVIDED AN ULTIMATE BEARING CAPACITY OF 300 KPA IS ACHIEVABLE. NO ALLOWANCE FOR LIQUIFIABLE SOIL, OR SOIL WITH SLOPE STABILITY ISSUES. IT IS THE RESPONSIBILITY OF THE CONTRACTOR AND THE OWNER TO VERIFY THE SITE CONDITIONS PRIOR TO COMMENCING THE CONSTRUCTION WORKS.

TANK LOCATION - PROXIMITY TO NEARBY STRUCTURES:
IT IS THE CONTRACTOR AND OWNER'S RESPONSIBILITY TO ENSURE THAT THE LOCATION OF THE TANK WITH RESPECT TO ADJACENT STRUCTURES COMPLY WITH THE LIMITS AND RESTRICTIONS SET OUT IN THESE DRAWINGS. DEVAN PLASTICS LTD SHALL BE NOTIFIED IMMEDIATELY IF THOSE LIMITS ARE NOT ACHIEVABLE.

BACKFILL AND BASECOURSE:
GAP 10 or GAP 20 SHALL BE USED FOR BACKFILL AND BASECOURSE MATERIAL. ALTERNATIVE MATERIAL SHALL NOT BE USED WITHOUT THE WRITTEN APPROVAL OF DEVAN PLASTICS LTD.

CONTRACTOR SHALL BACKFILL LIFTS OF 150MM. THE CONTRACTOR SHALL USE THE APPROPRIATE TOOLS AND CONSTRUCTION TECHNIQUES TO ENSURE ALL VOIDS ARE FILLED ALONG THE FULL LENGTH OF THE TANK, ENSURING SUFFICIENT SUPPORT.

BATTERING/BENCHING/SHORING:
MANAGING THE STABILITY OF THE TRENCH DURING EXCAVATION IS THE RESPONSIBILITY OF THE CONTRACTOR, AND SHALL BE CARRIED OUT WITH THE RELEVANT GUIDELINES AND BEST PRACTICES IN ACCORDANCE WITH THE HEALTH AND SAFETY AT WORK ACT 2015. THIS INCLUDES, BUT NOT LIMITED TO, ANY EXCAVATIONS DEEPER THAN 1.5M. THE CONTRACTOR SHALL CONSULT WITH SUITABLE INDUSTRY PROFESIONALS SHOULD FURTHER GUIDANCE BE REQUIRED FOR BENCHING, BATTERING AND SHORING.

NOTE:
THIS SHEET IS FOR THE INSTALLATION OF TANKS ABOVE MAXIMUM POSSIBLE WATER TABLE LEVELS OR FOR INSTALLATIONS NOT REQUIRING ANCHOR PADS AS DETERMINED THROUGH "DEVAN PLASTICS stormVAULT UNDERGROUND CYLINDRICAL TANKS TOOLBOX VERSION 1.0 (OR HIGHER) CALCULATOR". IF TANKS ARE BEING INSTALLED ABOVE MAXIMUM POSSIBLE WATER TABLE LEVELS THEN SITE SPECIFIC REPORTS OR WATER TABLE INFORMATION MUST PROVE THE WATER LEVEL CAN NOT POSSIBLY RISE ABOVE THE BOTTOM OF THE EXCAVATION. IF THIS INFORMATION CAN NOT BE PROVIDED, REFER TO SHEET 059-003-S-006. IT IS THE RESPONSIBILITY OF THE CONTRACTOR AND OWNER TO ENSURE CORRECT TANK INSTALLATION IN ACCORDANCE WITH THE DEVAN INSTALLATION GUIDES AND DRAWINGS.

| REV | ISSUE | Date |
|---|---|---|
| 1 | FOR CONSTRUCTION | 16.04.25 |
| 0 | FOR CONSTRUCTION | 01.11.24 |

| | | |
|---|---|---|
| DESIGNED | SK | Contact SENZ when in doubt. Refer to Architectural Drawings for set out, do not scale Structural Engineering Drawings |
| CHECKED | SK/RR | Business Address: L1, 52 Highbrook Drive, East Tamaki, Auckland 2013 |
| DRAWN | AS | Phone Number: +64 9 275 6029<br>Evening Number: +64 9 889 9350<br>E-mail Address: info@structural-engs.co.nz<br>Website: www.structural-engs.co.nz |

SENZ Structural Engineers New Zealand

CLIENT DEVAN

PROJECT
**DEVAN PLASTICS STANDARD DESIGN FOR UNDERGROUND TANKS**

SHEET TITLE
**NON-TRAFFICABLE TRIPLE TANK INSTALLATION INSTRUCTIONS WITHOUT ANCHORS**

FOR CONSTRUCTION

| SCALE | Drawing No. | REVISION |
|---|---|---|
| 1 : 50 @ A3<br>1:A3x2 @ A1 | 059-003 -S-005 | 1 |

NOTE:
stormVAULT 800mm TANKS MAY BE DIRECTLY SUBSTITUTED WITH THE stormVAULT 1200mm TANKS, PROVIDED ALL DIMENSIONAL CONSTRAINTS IN THESE DRAWINGS ARE FOLLOWED.

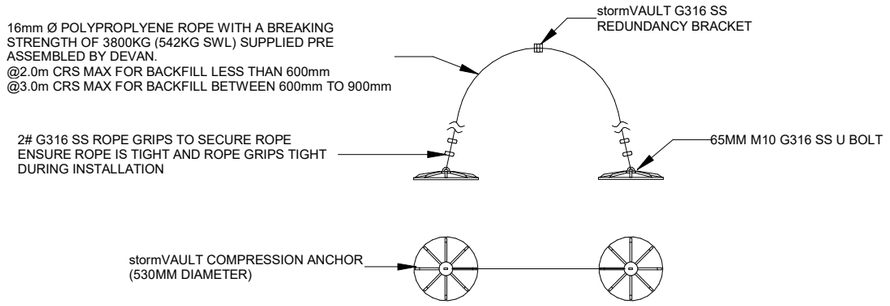


1 / S-006 **DETAIL**

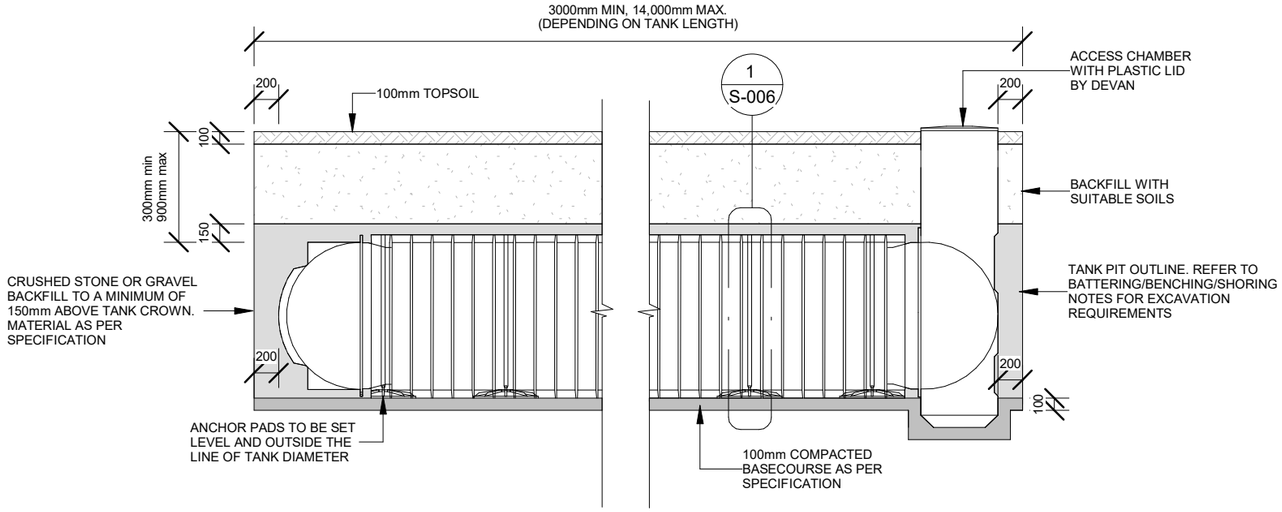


2 **1200mm DIAMETER TANK TYPICAL INSTALLATION**

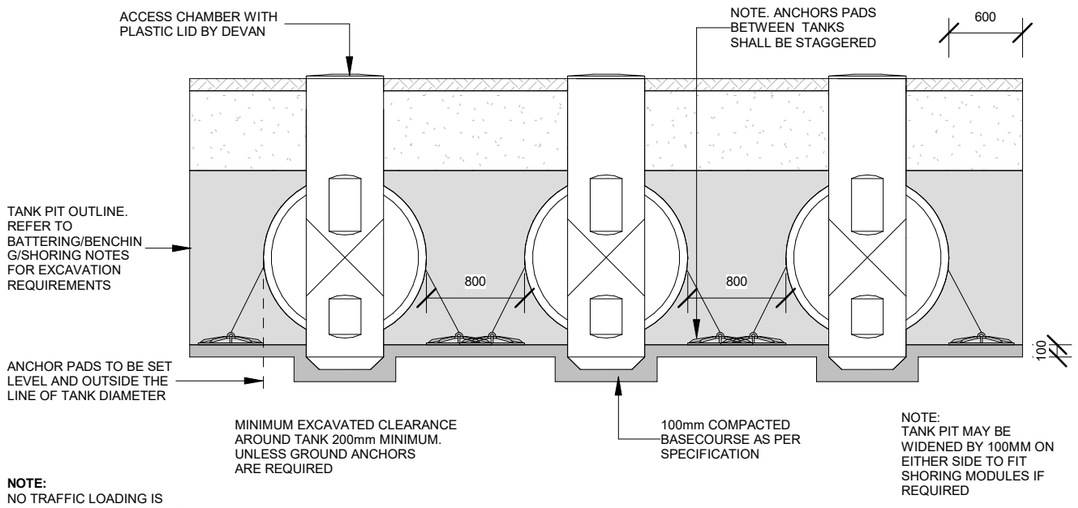


**NOTE:**
NO TRAFFIC LOADING IS ALLOWED OVER THE TANKS

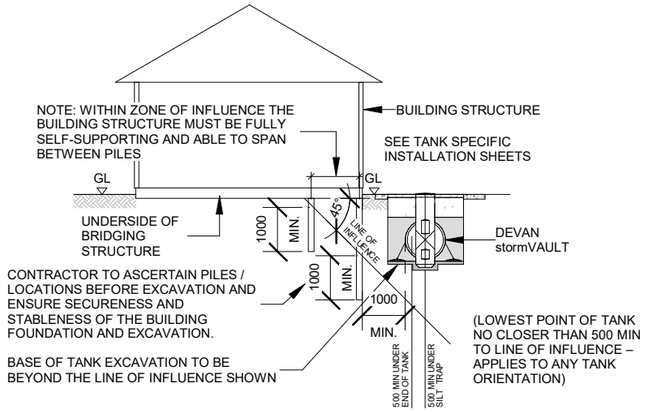


3 **TANK PLACEMENT NEAR PILED FOUNDATIONS**

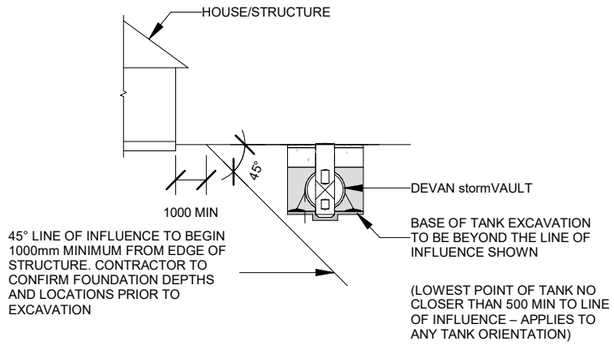


4 **TANK PLACEMENT NEAR BUILDING STRUCTURE**

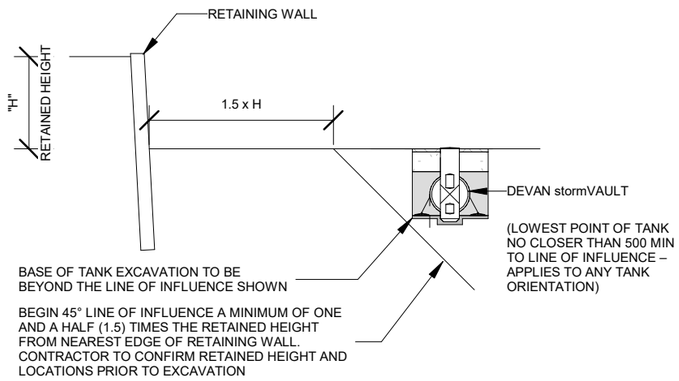


5 **TANK PLACEMENT NEAR RETAINING WALL**

NOTES:
- ALL DIMENSIONS IN MILLIMETRES UNO
- REFER TO STRUCTURAL SPECIFICATIONS SHEET OR CONCRETE REINFORCING & OTHER NOTES
- ALL LEVELS SHALL BE CONFIRMED BY THE CONTRACTOR PRIOR TO COMMENCEMENT OF WORK.
- ALL UNDERGROUND SERVICES SHALL BE CONFIRMED, LOCATED AND MARKED PRIOR TO ANY EXCAVATION WORKS,

- DEVAN PLASTICS LTD SHALL BE NOTIFIED IMMEDIATELY SHOULD ANY OF THE DESIGN PARAMETERS SHOWN ON THE DRAWINGS NOT BE ACHIEVABLE.

- REFER TO DEVAN PLASTICS LTD FOR MAXIMUM BURIAL DEPTH ALLOWANCES.

- TEMPORARY SUPPORT AND SHORING TO BE CARRIED OUT IN ACCORDANCE WITH WORKSAFE EXCAVATION SAFETY GUIDELINES.

- stormVAULT INSTALLATION TO BE CARRIED OUT IN CONJUCTION WITH DEVAN PRODUCT INFORMATION GUIDE AND THESE DRAWINGS

SOIL CONDITIONS:
SITE SOIL CONDITIONS ALLOW FOR EXPANSIVE SOIL UP TO AND INCLUDING CLASS H2 AS DEFINED IN AS2870, PROVIDED AN ULTIMATE BEARING CAPACITY OF 300 KPA IS ACHIEVABLE. NO ALLOWANCE FOR LIQUIFIABLE SOIL, OR SOIL WITH SLOPE STABILITY ISSUES. IT IS THE RESPONSIBILITY OF THE CONTRACTOR AND THE OWNER TO VERIFY THE SITE CONDITIONS PRIOR TO COMMENCING THE CONSTRUCTION WORKS.

TANK LOCATION - PROXIMITY TO NEARBY STRUCTURES:
IT IS THE CONTRACTOR AND OWNER'S RESPONSIBILITY TO ENSURE THAT THE LOCATION OF THE TANK WITH RESPECT TO ADJACENT STRUCTURES COMPLY WITH THE LIMITS AND RESTRICTIONS SET OUT IN THESE DRAWINGS. DEVAN PLASTICS LTD SHALL BE NOTIFIED IMMEDIATELY IF THOSE LIMITS ARE NOT ACHIEVABLE.

BACKFILL AND BASECOURSE:
GAP 10 or GAP 20 SHALL BE USED FOR BACKFILL AND BASECOURSE MATERIAL. ALTERNATIVE MATERIAL SHALL NOT BE USED WITHOUT THE WRITTEN APPROVAL OF DEVAN PLASTICS LTD.

CONTRACTOR SHALL BACKFILL LIFTS OF 150MM. THE CONTRACTOR SHALL USE THE APPROPRIATE TOOLS AND CONSTRUCTION TECHNIQUES TO ENSURE ALL VOIDS ARE FILLED ALONG THE FULL LENGTH OF THE TANK, ENSURING SUFFICIENT SUPPORT.

BATTERING/BENCHING/SHORING:
MANAGING THE STABILITY OF THE TRENCH DURING EXCAVATION IS THE RESPONSIBILITY OF THE CONTRACTOR, AND SHALL BE CARRIED OUT WITH THE RELEVANT GUIDELINES AND BEST PRACTICES IN ACCORDANCE WITH THE HEALTH AND SAFETY AT WORK ACT 2015. THIS INCLUDES, BUT NOT LIMITED TO, ANY EXCAVATIONS DEEPER THAN 1.5M. THE CONTRACTOR SHALL CONSULT WITH SUITABLE INDUSTRY PROFESIONALS SHOULD FURTHER GUIDANCE BE REQUIRED FOR BENCHING, BATTERING AND SHORING.

NOTE:
THIS SHEET IS FOR THE INSTALLATION OF TANKS REQUIRING ANCHOR PADS AS DETERMINED THROUGH "DEVAN PLASTICS stormVAULT UNDERGROUND CYLINDRICAL TANKS TOOLBOX VERSION 1.0 (OR HIGHER) CALCULATOR". IT IS THE RESPONSIBILITY OF THE CONTRACTOR AND OWNER TO ENSURE CORRECT TANK INSTALLATION IN ACCORDANCE WITH THE DEVAN INSTALLATION GUIDES AND DRAWINGS.

| REV | ISSUE | Date |
|---|---|---|
| 1 | FOR CONSTRUCTION | 16.04.25 |
| 0 | FOR CONSTRUCTION | 01.11.24 |

| | |
|---|---|
| DESIGNED | SK |
| CHECKED | SK/RR |
| DRAWN | AS |

Contact SENZ when in doubt. Refer to Architectural Drawings for set out, do not scale Structural Engineering Drawings


Business Address: L1, 52 Highbrook Drive, East Tamaki, Auckland 2013
Phone Number: +64 9 275 6029
Evening Number: +64 9 889 9350
E-mail Address: info@structural-engs.co.nz
Website: www.structural-engs.co.nz


SENZ Structural Engineers New Zealand

CLIENT DEVAN

PROJECT
**DEVAN PLASTICS STANDARD DESIGN FOR UNDERGROUND TANKS**

FOR CONSTRUCTION

SHEET TITLE
**NON-TRAFFICABLE TRIPLE TANK INSTALLATION INSTRUCTIONS WITH ANCHORS**

| SCALE | Drawing No. | REVISION |
|---|---|---|
| 1 : 50 @ A3<br>1:A3x2 @ A1 | 059-003 -S-006 | 1 |

NOTE:
stormVAULT 800mm TANKS MAY BE DIRECTLY SUBSTITUTED WITH THE stormVAULT 1200mm TANKS, PROVIDED ALL DIMENSIONAL CONSTRAINTS IN THESE DRAWINGS ARE FOLLOWED.

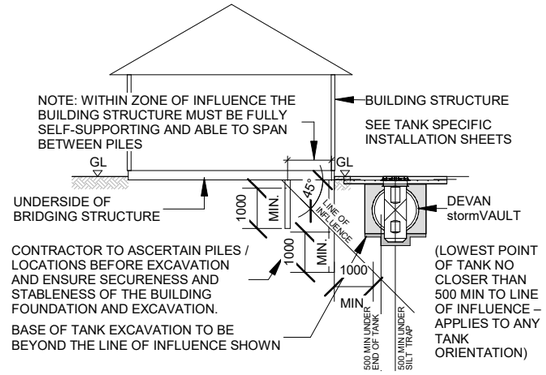


2 **TANK PLACEMENT NEAR PILED FOUNDATIONS**

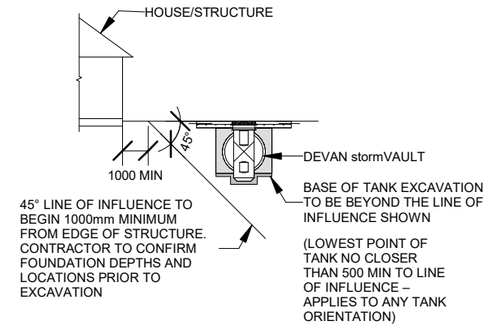


3 **TANK PLACEMENT NEAR BUILDING STRUCTURE**

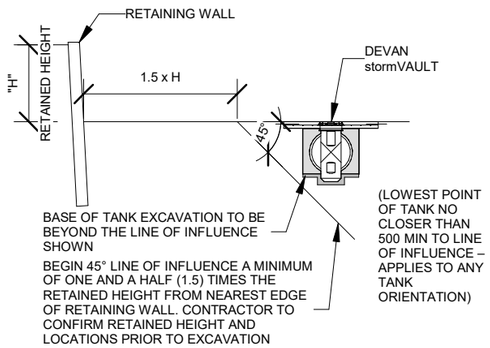


4 **TANK PLACEMENT NEAR RETAINING WALL**

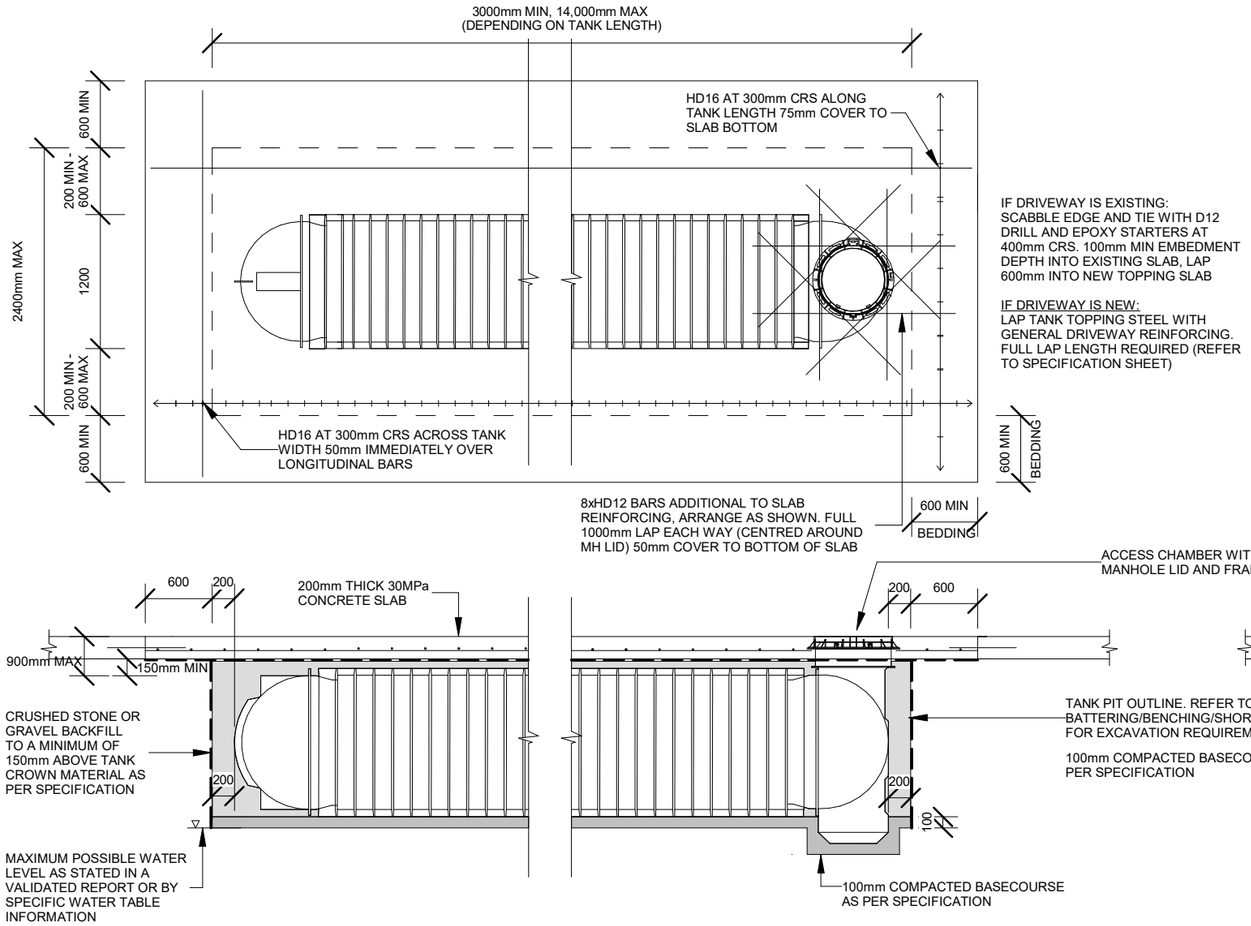


1 **1200mm DIAMETER TANK LOW WATER TABLE INSTALLATION**

NOTES:
- ALL DIMENSIONS IN MILLIMETRES UNO
- REFER TO STRUCTURAL SPECIFICATIONS SHEET OR CONCRETE REINFORCING & OTHER NOTES
- ALL LEVELS SHALL BE CONFIRMED BY THE CONTRACTOR PRIOR TO COMMENCEMENT OF WORK.
- ALL UNDERGROUND SERVICES SHALL BE CONFIRMED, LOCATED AND MARKED PRIOR TO ANY EXCAVATION WORKS,

- DEVAN PLASTICS LTD SHALL BE NOTIFIED IMMEDIATELY SHOULD ANY OF THE DESIGN PARAMETERS SHOWN ON THE DRAWINGS NOT BE ACHIEVABLE.

- REFER TO DEVAN PLASTICS LTD FOR MAXIMUM BURIAL DEPTH ALLOWANCES.

- TEMPORARY SUPPORT AND SHORING TO BE CARRIED OUT IN ACCORDANCE WITH WORKSAFE EXCAVATION SAFETY GUIDELINES.

- stormVAULT INSTALLATION TO BE CARRIED OUT IN CONJUCTION WITH DEVAN PRODUCT INFORMATION GUIDE AND THESE DRAWINGS

SOIL CONDITIONS
SITE SOIL CONDITIONS ARE CONSISTENT WITH "GOOD GROUND" AS DEFINED IN NZS3604:2011. i.e. NO ALLOWANCE FOR EXPANSIVE OR LIQUIFIABLE SOIL, OR SOIL WITH SLOPE STABILITY ISSUES. IT IS THE RESPONSIBILITY OF THE CONTRACTOR AND THE OWNER TO VERIFY THE SITE CONDITIONS PRIOR TO COMMENCING THE CONSTRUCTION WORKS.

TANK LOCATION - PROXIMITY TO NEARBY STRUCTURES:
IT IS THE CONTRACTOR AND OWNER'S RESPONSIBILITY TO ENSURE THAT THE LOCATION OF THE TANK WITH RESPECT TO ADJACENT STRUCTURES COMPLY WITH THE LIMITS AND RESTRICTIONS SET OUT IN THESE DRAWINGS. DEVAN PLASTICS LTD SHALL BE NOTIFIED IMMEDIATELY IF THOSE LIMITS ARE NOT ACHIEVABLE.

BACKFILL AND BASECOURSE:
GAP 10 or GAP 20 SHALL BE USED FOR BACKFILL AND BASECOURSE MATERIAL. ALTERNATIVE MATERIAL SHALL NOT BE USED WITHOUT THE WRITTEN APPROVAL OF DEVAN PLASTICS LTD.

CONTRACTOR SHALL BACKFILL LIFTS OF 150MM. THE CONTRACTOR SHALL USE THE APPROPRIATE TOOLS AND CONSTRUCTION TECHNIQUES TO ENSURE ALL VOIDS ARE FILLED ALONG THE FULL LENGTH OF THE TANK, ENSURING SUFFICIENT SUPPORT.

BATTERING/BENCHING/SHORING:
MANAGING THE STABILITY OF THE TRENCH DURING EXCAVATION IS THE RESPONSIBILITY OF THE CONTRACTOR, AND SHALL BE CARRIED OUT WITH THE RELEVANT GUIDELINES AND BEST PRACTICES IN ACCORDANCE WITH THE HEALTH AND SAFETY AT WORK ACT 2015. THIS INCLUDES, BUT NOT LIMITED TO, ANY EXCAVATIONS DEEPER THAN 1.5M. THE CONTRACTOR SHALL CONSULT WITH SUITABLE INDUSTRY PROFESIONALS SHOULD FURTHER GUIDANCE BE REQUIRED FOR BENCHING, BATTERING, AND SHORING.

LOADING:
VEHICLES UP TO 10,000kg "MEDIUM" TRAFFIC TABLE 3.1(g) NZS 1170.1, 5kPA / 31kN.
CONTRACTOR AND TANK OWNER TO ENSURE TANK POSITION DOES NOT EXPOSE THE TANK TO LOADS GREATER THAN SPECIFIED IN THESE DRAWINGS FOR THE DESIGN LIFE OF THE UNIT.

NOTE:
THIS SHEET IS FOR THE INSTALLATION OF TANKS ABOVE MAXIMUM POSSIBLE WATER TABLE LEVELS OR FOR INSTALLATIONS NOT REQUIRING ANCHOR PADS AS DETERMINED THROUGH "DEVAN PLASTICS stormVAULT UNDERGROUND CYLINDRICAL TANKS TOOLBOX VERSION 1.0 (OR HIGHER) CALCULATOR". IF TANKS ARE BEING INSTALLED ABOVE MAXIMUM POSSIBLE WATER TABLE LEVELS THEN SITE SPECIFIC REPORTS OR WATER TABLE INFORMATION MUST PROVE THE WATER LEVEL CAN NOT POSSIBLY RISE ABOVE THE BOTTOM OF THE EXCAVATION. IF THIS INFORMATION CAN NOT BE PROVIDED, REFER TO SHEET 059-003-S-103. IT IS THE RESPONSIBILITY OF THE CONTRACTOR AND OWNER TO ENSURE CORRECT TANK INSTALLATION IN ACCORDANCE WITH THE DEVAN INSTALLATION GUIDES AND DRAWINGS.

| REV | ISSUE | Date |
|---|---|---|
| 1 | FOR CONSTRUCTION | 16.04.25 |
| 0 | FOR CONSTRUCTION | 01.11.24 |

| | | |
|---|---|---|
| DESIGNED | SK | Contact SENZ when in doubt. Refer to Architectural Drawings for set out, do not scale Structural Engineering Drawings |
| CHECKED | SK/RR | |
| DRAWN | AS | |


Business Address: L1, 52 Highbrook Drive, East Tamaki, Auckland 2013
Phone Number: +64 9 275 6029
Evening Number: +64 9 889 9350
E-mail Address: info@structural-engs.co.nz
Website: www.structural-engs.co.nz


SENZ Structural Engineers New Zealand

CLIENT DEVAN

PROJECT
**DEVAN PLASTICS STANDARD DESIGN FOR UNDERGROUND TANKS**

SHEET TITLE
**RESIDENTIAL TRAFFIC LOADING - SINGLE TANK INSTALLATION INSTRUCTIONS WITHOUT ANCHORS - SLAB ON GOOD GROUND**

FOR CONSTRUCTION

| SCALE | Drawing No. | REVISION |
|---|---|---|
| As indicated @ A3<br>1:A3x2 @ A1 | 059-003 -S-102 | 1 |

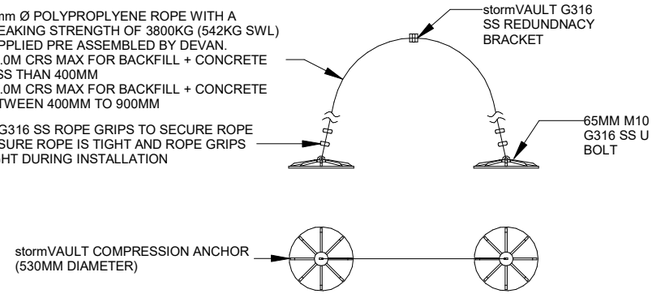


1 S-103 **DETAIL**

NOTE:
stormVAULT 800mm TANKS MAY BE DIRECTLY SUBSTITUTED WITH THE stormVAULT 1200mm TANKS, PROVIDED ALL DIMENSIONAL CONSTRAINTS IN THESE DRAWINGS ARE FOLLOWED.

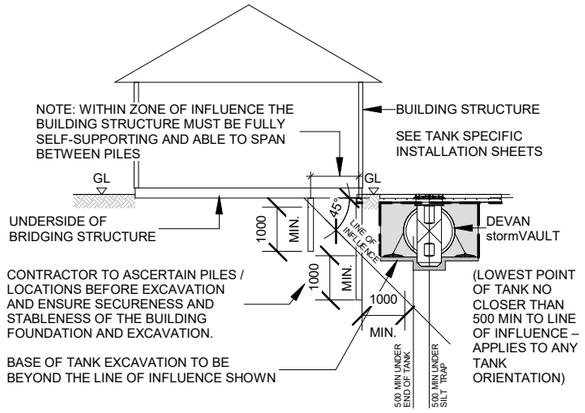


3 **TANK PLACEMENT NEAR PILED FOUNDATIONS**

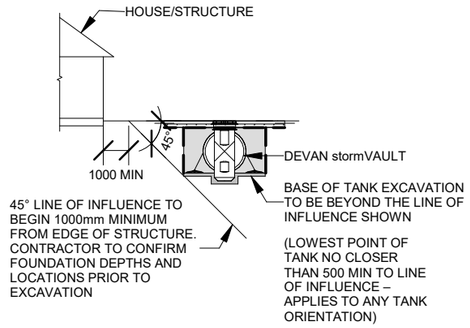


4 **TANK PLACEMENT NEAR BUILDING STRUCTURE**

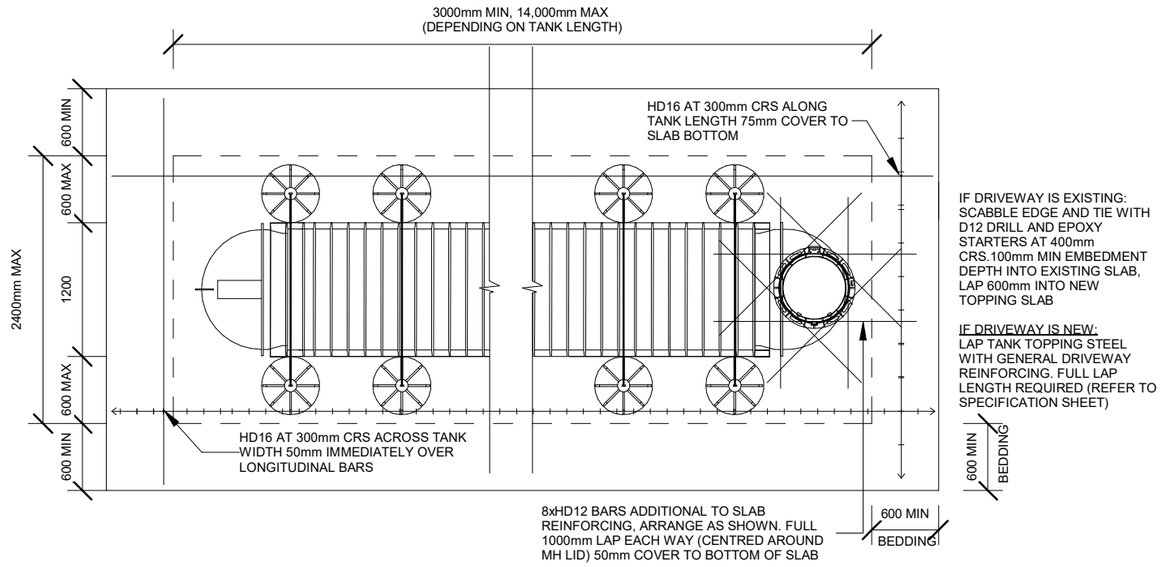


IF DRIVEWAY IS EXISTING:
SCABBLE EDGE AND TIE WITH D12 DRILL AND EPOXY STARTERS AT 400mm CRS.100mm MIN EMBEDMENT DEPTH INTO EXISTING SLAB, LAP 600mm INTO NEW TOPPING SLAB

IF DRIVEWAY IS NEW:
LAP TANK TOPPING STEEL WITH GENERAL DRIVEWAY REINFORCING. FULL LAP LENGTH REQUIRED (REFER TO SPECIFICATION SHEET)

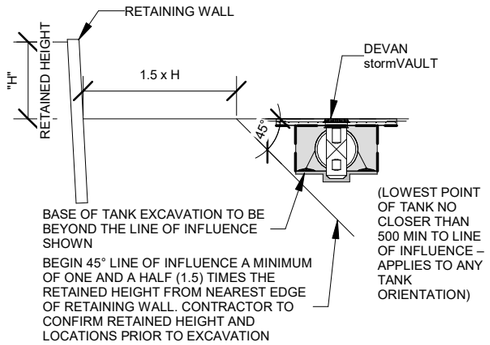


5 **TANK PLACEMENT NEAR RETAINING WALL**

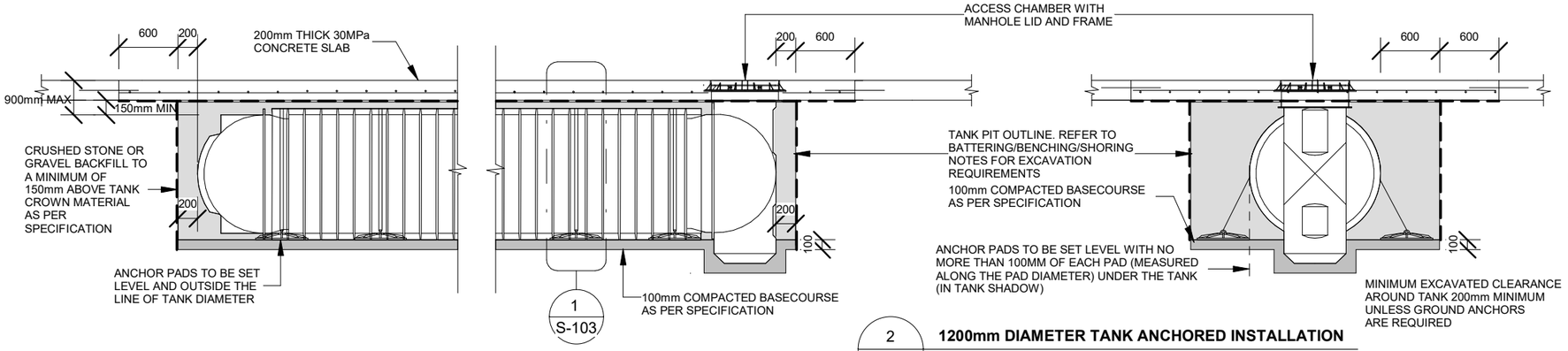


NOTE:
TANK PIT MAY BE WIDENED BY 100MM ON EITHER SIDE TO FIT SHORING MODULES IF REQUIRED

2 **1200mm DIAMETER TANK ANCHORED INSTALLATION**

NOTES:
- ALL DIMENSIONS IN MILLIMETRES UNO
- REFER TO STRUCTURAL SPECIFICATIONS SHEET OR CONCRETE REINFORCING & OTHER NOTES
- ALL LEVELS SHALL BE CONFIRMED BY THE CONTRACTOR PRIOR TO COMMENCEMENT OF WORK.
- ALL UNDERGROUND SERVICES SHALL BE CONFIRMED, LOCATED AND MARKED PRIOR TO ANY EXCAVATION WORKS,

- DEVAN PLASTICS LTD SHALL BE NOTIFIED IMMEDIATELY SHOULD ANY OF THE DESIGN PARAMETERS SHOWN ON THE DRAWINGS NOT BE ACHIEVABLE.

- REFER TO DEVAN PLASTICS LTD FOR MAXIMUM BURIAL DEPTH ALLOWANCES.

- TEMPORARY SUPPORT AND SHORING TO BE CARRIED OUT IN ACCORDANCE WITH WORKSAFE EXCAVATION SAFETY GUIDELINES.

- stormVAULT INSTALLATION TO BE CARRIED OUT IN CONJUCTION WITH DEVAN PRODUCT INFORMATION GUIDE AND THESE DRAWINGS

SOIL CONDITIONS
SITE SOIL CONDITIONS ARE CONSISTENT WITH "GOOD GROUND" AS DEFINED IN NZS3604:2011. i.e. NO ALLOWANCE FOR EXPANSIVE OR LIQUIFIABLE SOIL, OR SOIL WITH SLOPE STABILITY ISSUES. IT IS THE RESPONSIBILITY OF THE CONTRACTOR AND THE OWNER TO VERIFY THE SITE CONDITIONS PRIOR TO COMMENCING THE CONSTRUCTION WORKS.

TANK LOCATION - PROXIMITY TO NEARBY STRUCTURES:
IT IS THE CONTRACTOR AND OWNER'S RESPONSIBILITY TO ENSURE THAT THE LOCATION OF THE TANK WITH RESPECT TO ADJACENT STRUCTURES COMPLY WITH THE LIMITS AND RESTRICTIONS SET OUT IN THESE DRAWINGS. DEVAN PLASTICS LTD SHALL BE NOTIFIED IMMEDIATELY IF THOSE LIMITS ARE NOT ACHIEVABLE.

BACKFILL AND BASECOURSE:
GAP 10 or GAP 20 SHALL BE USED FOR BACKFILL AND BASECOURSE MATERIAL. ALTERNATIVE MATERIAL SHALL NOT BE USED WITHOUT THE WRITTEN APPROVAL OF DEVAN PLASTICS LTD.

CONTRACTOR SHALL BACKFILL LIFTS OF 150MM. THE CONTRACTOR SHALL USE THE APPROPRIATE TOOLS AND CONSTRUCTION TECHNIQUES TO ENSURE ALL VOIDS ARE FILLED ALONG THE FULL LENGTH OF THE TANK, ENSURING SUFFICIENT SUPPORT.

BATTERING/BENCHING/SHORING:
MANAGING THE STABILITY OF THE TRENCH DURING EXCAVATION IS THE RESPONSIBILITY OF THE CONTRACTOR, AND SHALL BE CARRIED OUT WITH THE RELEVANT GUIDELINES AND BEST PRACTICES IN ACCORDANCE WITH THE HEALTH AND SAFETY AT WORK ACT 2015. THIS INCLUDES, BUT NOT LIMITED TO, ANY EXCAVATIONS DEEPER THAN 1.5M. THE CONTRACTOR SHALL CONSULT WITH SUITABLE INDUSTRY PROFESIONALS SHOULD FURTHER GUIDANCE BE REQUIRED FOR BENCHING, BATTERING, AND SHORING.

LOADING:
VEHICLES UP TO 10,000kg "MEDIUM" TRAFFIC TABLE 3.1(g) NZS 1170.1, 5kPA / 31kN.
CONTRACTOR AND TANK OWNER TO ENSURE TANK POSITION DOES NOT EXPOSE THE TANK TO LOADS GREATER THAN SPECIFIED IN THESE DRAWINGS FOR THE DESIGN LIFE OF THE UNIT.

NOTE:
THIS SHEET IS FOR THE INSTALLATION OF TANKS REQUIRING ANCHOR PADS AS DETERMINED THROUGH "DEVAN PLASTICS stormVAULT UNDERGROUND CYLINDRICAL TANKS TOOLBOX VERSION 1.0 (OR HIGHER) CALCULATOR". IT IS THE RESPONSIBILITY OF THE CONTRACTOR AND OWNER TO ENSURE CORRECT TANK INSTALLATION IN ACCORDANCE WITH THE DEVAN INSTALLATION GUIDES AND DRAWINGS.

| REV | ISSUE | Date |
|---|---|---|
| 1 | FOR CONSTRUCTION | 16.04.25 |
| 0 | FOR CONSTRUCTION | 01.11.24 |

| | | |
|---|---|---|
| DESIGNED | SK | Contact SENZ when in doubt. Refer to Architectural Drawings for set out, do not scale Structural Engineering Drawings |
| CHECKED | SK/RR | Business Address: L1, 52 Highbrook Drive, East Tamaki, Auckland 2013 |
| DRAWN | AS | Phone Number: +64 9 275 6029<br>Evening Number: +64 9 889 9350<br>E-mail Address: info@structural-engs.co.nz<br>Website: www.structural-engs.co.nz |

SENZ Structural Engineers New Zealand

CLIENT DEVAN

PROJECT
**DEVAN PLASTICS STANDARD DESIGN FOR UNDERGROUND TANKS**

SHEET TITLE
**RESIDENTIAL TRAFFIC LOADING - SINGLE TANK INSTALLATION INSTRUCTIONS WITH ANCHORS - SLAB ON GOOD GROUND**

FOR CONSTRUCTION

| SCALE | Drawing No. | REVISION |
|---|---|---|
| As indicated @ A3<br>1:A3x2 @ A1 | 059-003 -S-103 | 1 |

NOTE:
stormVAULT 800mm TANKS MAY BE DIRECTLY SUBSTITUTED WITH THE stormVAULT 1200mm TANKS, PROVIDED ALL DIMENSIONAL CONSTRAINTS IN THESE DRAWINGS ARE FOLLOWED.

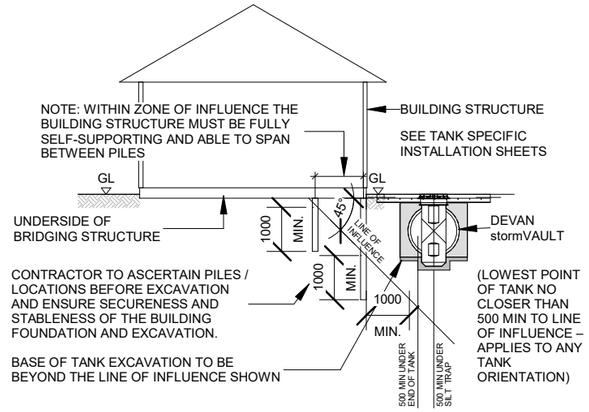


2 **TANK PLACEMENT NEAR PILED FOUNDATIONS**

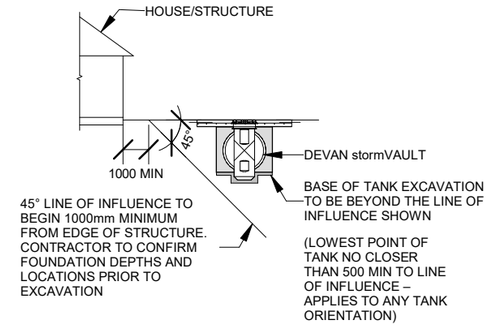


3 **TANK PLACEMENT NEAR BUILDING STRUCTURE**

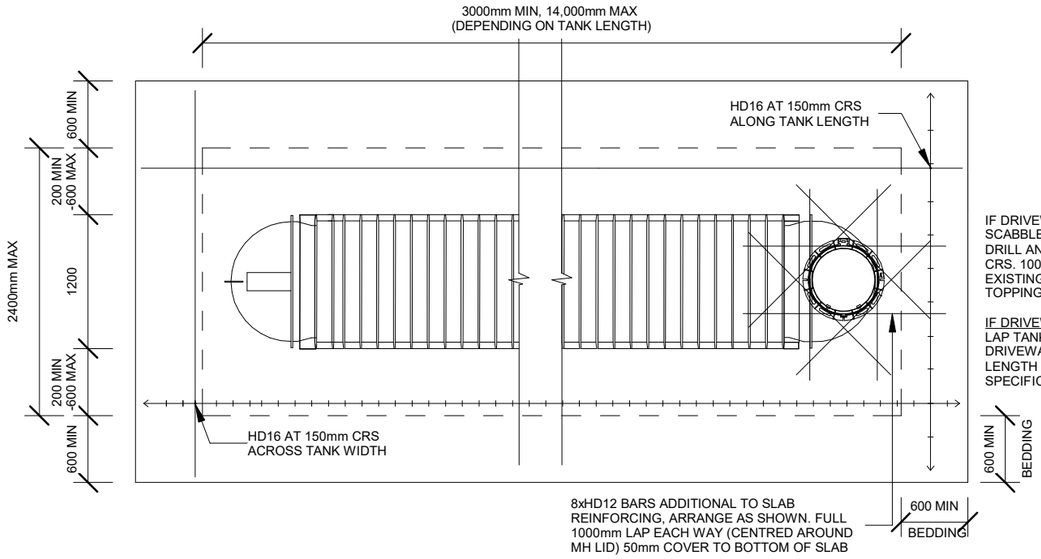


IF DRIVEWAY IS EXISTING:
SCABBLE EDGE AND TIE WITH D12 DRILL AND EPOXY STARTERS AT 400mm CRS. 100mm MIN EMBEDMENT DEPTH INTO EXISTING SLAB, LAP 600mm INTO NEW TOPPING SLAB

IF DRIVEWAY IS NEW:
LAP TANK TOPPING STEEL WITH GENERAL DRIVEWAY REINFORCING. FULL LAP LENGTH REQUIRED (REFER TO SPECIFICATION SHEET)

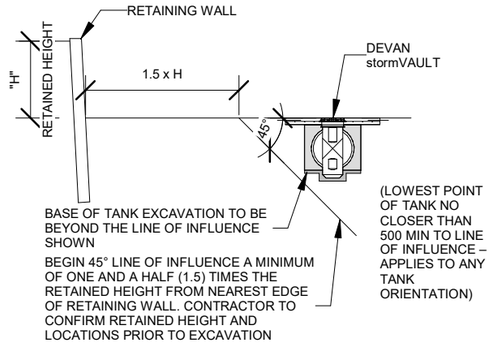


4 **TANK PLACEMENT NEAR RETAINING WALL**

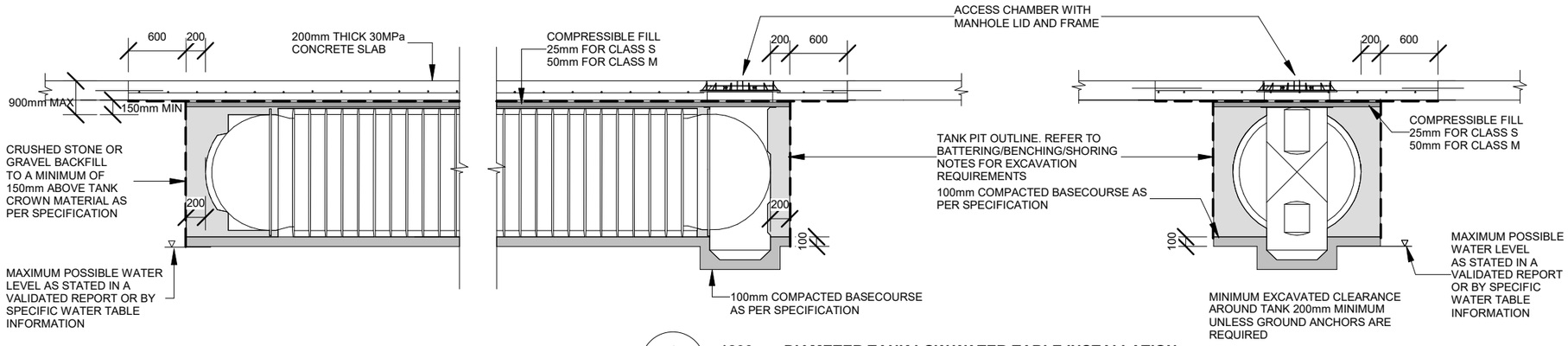


1 **1200mm DIAMETER TANK LOW WATER TABLE INSTALLATION**

NOTES:
- ALL DIMENSIONS IN MILLIMETRES UNO
- REFER TO STRUCTURAL SPECIFICATIONS SHEET OR CONCRETE REINFORCING & OTHER NOTES
- ALL LEVELS SHALL BE CONFIRMED BY THE CONTRACTOR PRIOR TO COMMENCEMENT OF WORK.
- ALL UNDERGROUND SERVICES SHALL BE CONFIRMED, LOCATED AND MARKED PRIOR TO ANY EXCAVATION WORKS,

- DEVAN PLASTICS LTD SHALL BE NOTIFIED IMMEDIATELY SHOULD ANY OF THE DESIGN PARAMETERS SHOWN ON THE DRAWINGS NOT BE ACHIEVABLE.

- REFER TO DEVAN PLASTICS LTD FOR MAXIMUM BURIAL DEPTH ALLOWANCES.

- TEMPORARY SUPPORT AND SHORING TO BE CARRIED OUT IN ACCORDANCE WITH WORKSAFE EXCAVATION SAFETY GUIDELINES.

- stormVAULT INSTALLATION TO BE CARRIED OUT IN CONJUCTION WITH DEVAN PRODUCT INFORMATION GUIDE AND THESE DRAWINGS

SOIL CONDITIONS
SITE SOIL CONDITIONS ALLOW FOR EXPANSIVE SOIL UP TO AND INCLUDING CLASS M AS DEFINED IN AS2870, PROVIDED AN ULTIMATE BEARING CAPACITY OF 300 KPA IS ACHIEVABLE FOR THE SUBGRADE DIRECTLY SUPPORTING THE SLAB AND THE BASECOURSE. NO ALLOWANCE FOR LIQUIFIABLE SOIL, OR SOIL WITH SLOPE STABILITY ISSUES. IT IS THE RESPONSIBILITY OF THE CONTRACTOR AND THE OWNER TO VERIFY THE SITE CONDITIONS PRIOR TO COMMENCING THE CONSTRUCTION WORKS.

TANK LOCATION - PROXIMITY TO NEARBY STRUCTURES:
IT IS THE CONTRACTOR AND OWNER'S RESPONSIBILITY TO ENSURE THAT THE LOCATION OF THE TANK WITH RESPECT TO ADJACENT STRUCTURES COMPLY WITH THE LIMITS AND RESTRICTIONS SET OUT IN THESE DRAWINGS. DEVAN PLASTICS LTD SHALL BE NOTIFIED IMMEDIATELY IF THOSE LIMITS ARE NOT ACHIEVABLE.

BACKFILL AND BASECOURSE:
GAP 10 or GAP 20 SHALL BE USED FOR BACKFILL AND BASECOURSE MATERIAL. ALTERNATIVE MATERIAL SHALL NOT BE USED WITHOUT THE WRITTEN APPROVAL OF DEVAN PLASTICS LTD.

CONTRACTOR SHALL BACKFILL LIFTS OF 150MM. THE CONTRACTOR SHALL USE THE APPROPRIATE TOOLS AND CONSTRUCTION TECHNIQUES TO ENSURE ALL VOIDS ARE FILLED ALONG THE FULL LENGTH OF THE TANK, ENSURING SUFFICIENT SUPPORT.

BATTERING/BENCHING/SHORING:
MANAGING THE STABILITY OF THE TRENCH DURING EXCAVATION IS THE RESPONSIBILITY OF THE CONTRACTOR, AND SHALL BE CARRIED OUT WITH THE RELEVANT GUIDELINES AND BEST PRACTICES IN ACCORDANCE WITH THE HEALTH AND SAFETY AT WORK ACT 2015. THIS INCLUDES, BUT NOT LIMITED TO, ANY EXCAVATIONS DEEPER THAN 1.5M. THE CONTRACTOR SHALL CONSULT WITH SUITABLE INDUSTRY PROFESIONALS SHOULD FURTHER GUIDANCE BE REQUIRED FOR BENCHING, BATTERING, AND SHORING.

LOADING:
VEHICLES UP TO 10,000kg "MEDIUM" TRAFFIC TABLE 3.1(g) NZS 1170.1, 5kPA / 31kN.
CONTRACTOR AND TANK OWNER TO ENSURE TANK POSITION DOES NOT EXPOSE THE TANK TO LOADS GREATER THAN SPECIFIED IN THESE DRAWINGS FOR THE DESIGN LIFE OF THE UNIT.

NOTE:
THIS SHEET IS FOR THE INSTALLATION OF TANKS ABOVE MAXIMUM POSSIBLE WATER TABLE LEVELS OR FOR INSTALLATIONS NOT REQUIRING ANCHOR PADS AS DETERMINED THROUGH "DEVAN PLASTICS stormVAULT UNDERGROUND CYLINDRICAL TANKS TOOLBOX VERSION 1.0" (OR HIGHER) CALCULATOR". IF TANKS ARE BEING INSTALLED ABOVE MAXIMUM POSSIBLE WATER TABLE LEVELS THEN SITE SPECIFIC REPORTS OR WATER TABLE INFORMATION MUST PROVE THE WATER LEVEL CAN NOT POSSIBLY RISE ABOVE THE BOTTOM OF THE EXCAVATION. IF THIS INFORMATION CAN NOT BE PROVIDED, REFER TO SHEET 059-003-S-105. IT IS THE RESPONSIBILITY OF THE CONTRACTOR AND OWNER TO ENSURE CORRECT TANK INSTALLATION IN ACCORDANCE WITH THE DEVAN INSTALLATION GUIDES AND DRAWINGS.

| REV | ISSUE | Date |
|---|---|---|
| 1 | FOR CONSTRUCTION | 16.04.25 |
| 0 | FOR CONSTRUCTION | 01.11.24 |

| | | |
|---|---|---|
| DESIGNED | SK | Contact SENZ when in doubt. Refer to Architectural Drawings for set out, do not scale Structural Engineering Drawings |
| CHECKED | SK/RR | Business Address: L1, 52 Highbrook Drive, East Tamaki, Auckland 2013 |
| DRAWN | AS | Phone Number: +64 9 275 6029<br>Evening Number: +64 9 889 9350<br>E-mail Address: info@structural-engs.co.nz<br>Website: www.structural-engs.co.nz |

SENZ Structural Engineers New Zealand

CLIENT DEVAN

PROJECT
**DEVAN PLASTICS STANDARD DESIGN FOR UNDERGROUND TANKS**

SHEET TITLE
**RESIDENTIAL TRAFFIC LOADING - SINGLE TANK INSTALLATION INSTRUCTIONS WITHOUT ANCHORS - SLAB ON CLASS M EXPANSIVE SOIL**

FOR CONSTRUCTION

| SCALE | Drawing No. | REVISION |
|---|---|---|
| As indicated @ A3<br>1:A3x2 @ A1 | 059-003 -S-104 | 1 |

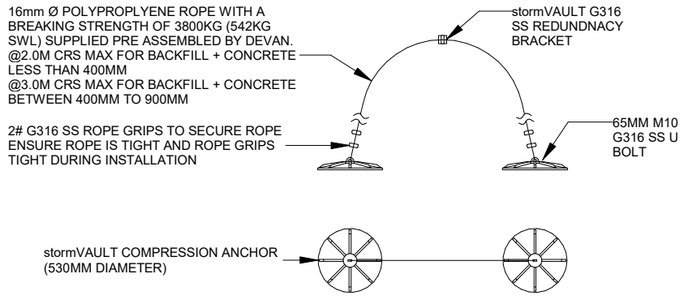


NOTE:
stormVAULT 800mm TANKS MAY BE DIRECTLY SUBSTITUTED WITH THE stormVAULT 1200mm TANKS, PROVIDED ALL DIMENSIONAL CONSTRAINTS IN THESE DRAWINGS ARE FOLLOWED.

1 / S-105 **DETAIL**

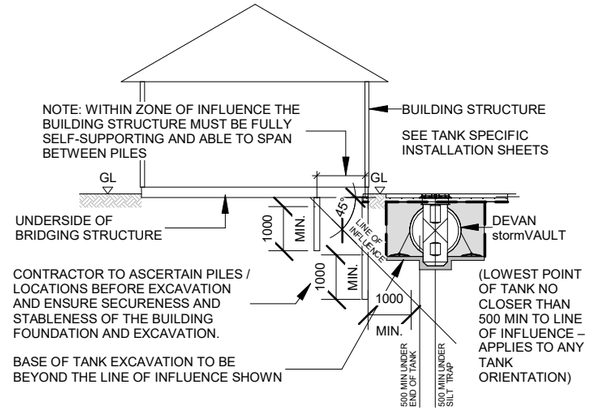


3 **TANK PLACEMENT NEAR PILED FOUNDATIONS**

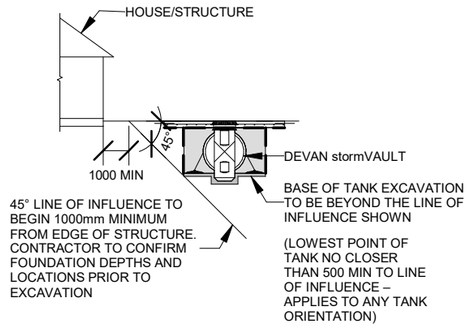


4 **TANK PLACEMENT NEAR BUILDING STRUCTURE**

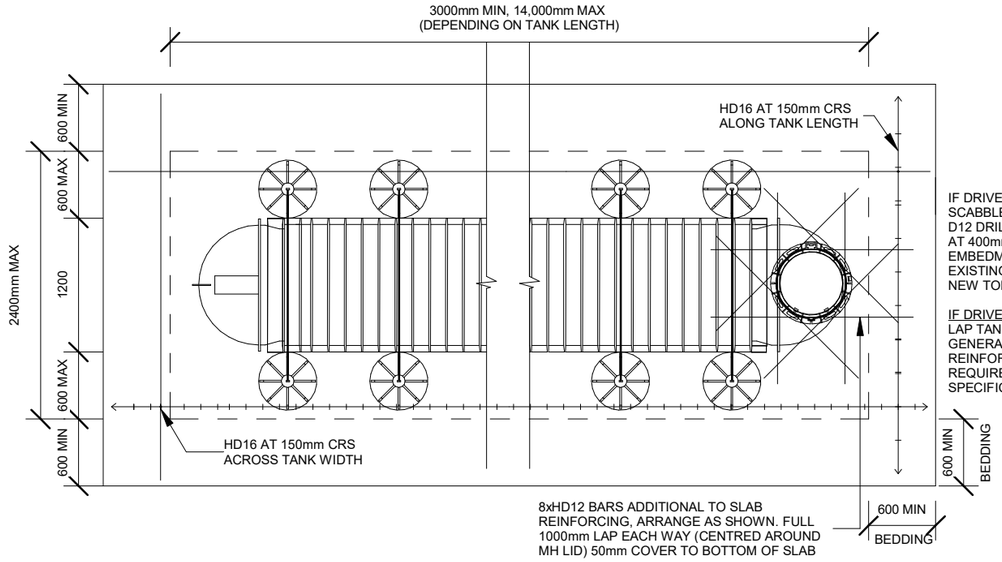


IF DRIVEWAY IS EXISTING:
SCABBLE EDGE AND TIE WITH D12 DRILL AND EPOXY STARTERS AT 400mm CRS. 100mm MIN EMBEDMENT DEPTH INTO EXISTING SLAB, LAP 600mm INTO NEW TOPPING SLAB

IF DRIVEWAY IS NEW:
LAP TANK TOPPING STEEL WITH GENERAL DRIVEWAY REINFORCING. FULL LAP LENGTH REQUIRED (REFER TO SPECIFICATION SHEET)

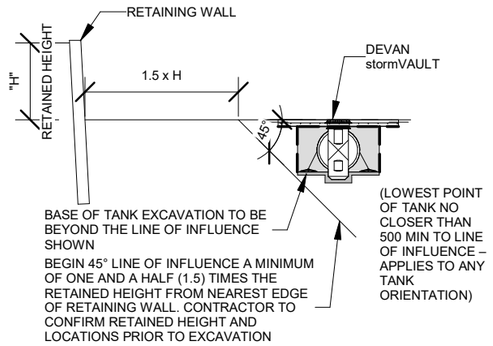


5 **TANK PLACEMENT NEAR RETAINING WALL**

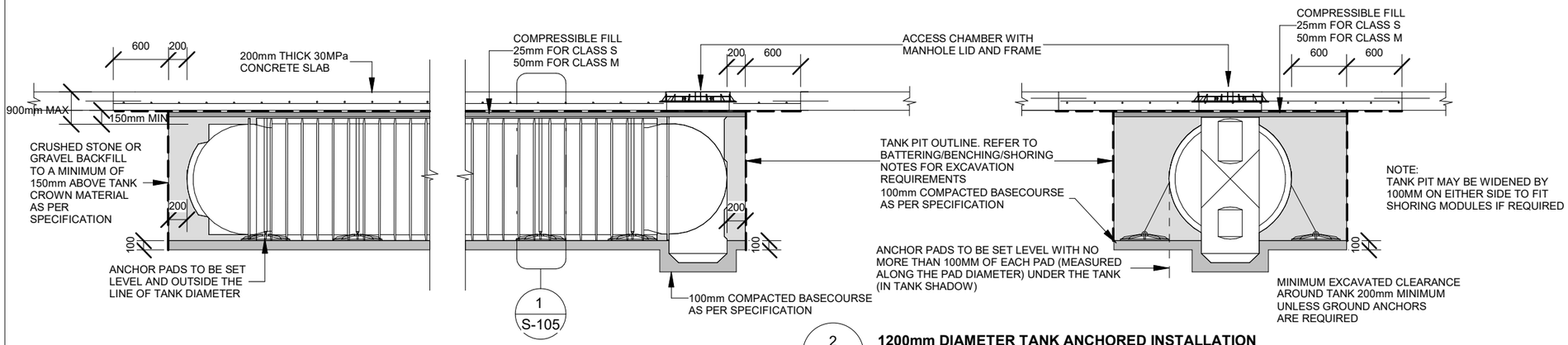


2 **1200mm DIAMETER TANK ANCHORED INSTALLATION**

NOTES:
- ALL DIMENSIONS IN MILLIMETRES UNO
- REFER TO STRUCTURAL SPECIFICATIONS SHEET OR CONCRETE REINFORCING & OTHER NOTES
- ALL LEVELS SHALL BE CONFIRMED BY THE CONTRACTOR PRIOR TO COMMENCEMENT OF WORK.
- ALL UNDERGROUND SERVICES SHALL BE CONFIRMED, LOCATED AND MARKED PRIOR TO ANY EXCAVATION WORKS,

- DEVAN PLASTICS LTD SHALL BE NOTIFIED IMMEDIATELY SHOULD ANY OF THE DESIGN PARAMETERS SHOWN ON THE DRAWINGS NOT BE ACHIEVABLE.

- REFER TO DEVAN PLASTICS LTD FOR MAXIMUM BURIAL DEPTH ALLOWANCES.

- TEMPORARY SUPPORT AND SHORING TO BE CARRIED OUT IN ACCORDANCE WITH WORKSAFE EXCAVATION SAFETY GUIDELINES.

- stormVAULT INSTALLATION TO BE CARRIED OUT IN CONJUCTION WITH DEVAN PRODUCT INFORMATION GUIDE AND THESE DRAWINGS

SOIL CONDITIONS
SITE SOIL CONDITIONS ALLOW FOR EXPANSIVE SOIL UP TO AND INCLUDING CLASS M AS DEFINED IN AS2870, PROVIDED AN ULTIMATE BEARING CAPACITY OF 300 KPA IS ACHIEVABLE FOR THE SUBGRADE DIRECTLY SUPPORTING THE SLAB AND THE BASECOURSE. NO ALLOWANCE FOR LIQUIFIABLE SOIL, OR SOIL WITH SLOPE STABILITY ISSUES. IT IS THE RESPONSIBILITY OF THE CONTRACTOR AND THE OWNER TO VERIFY THE SITE CONDITIONS PRIOR TO COMMENCING THE CONSTRUCTION WORKS.

TANK LOCATION - PROXIMITY TO NEARBY STRUCTURES:
IT IS THE CONTRACTOR AND OWNER'S RESPONSIBILITY TO ENSURE THAT THE LOCATION OF THE TANK WITH RESPECT TO ADJACENT STRUCTURES COMPLY WITH THE LIMITS AND RESTRICTIONS SET OUT IN THESE DRAWINGS. DEVAN PLASTICS LTD SHALL BE NOTIFIED IMMEDIATELY IF THOSE LIMITS ARE NOT ACHIEVABLE.

BACKFILL AND BASECOURSE:
GAP 10 or GAP 20 SHALL BE USED FOR BACKFILL AND BASECOURSE MATERIAL. ALTERNATIVE MATERIAL SHALL NOT BE USED WITHOUT THE WRITTEN APPROVAL OF DEVAN PLASTICS LTD.

CONTRACTOR SHALL BACKFILL LIFTS OF 150MM. THE CONTRACTOR SHALL USE THE APPROPRIATE TOOLS AND CONSTRUCTION TECHNIQUES TO ENSURE ALL VOIDS ARE FILLED ALONG THE FULL LENGTH OF THE TANK, ENSURING SUFFICIENT SUPPORT.

BATTERING/BENCHING/SHORING:
MANAGING THE STABILITY OF THE TRENCH DURING EXCAVATION IS THE RESPONSIBILITY OF THE CONTRACTOR, AND SHALL BE CARRIED OUT WITH THE RELEVANT GUIDELINES AND BEST PRACTICES IN ACCORDANCE WITH THE HEALTH AND SAFETY AT WORK ACT 2015. THIS INCLUDES, BUT NOT LIMITED TO, ANY EXCAVATIONS DEEPER THAN 1.5M. THE CONTRACTOR SHALL CONSULT WITH SUITABLE INDUSTRY PROFESIONALS SHOULD FURTHER GUIDANCE BE REQUIRED FOR BENCHING, BATTERING, AND SHORING.

LOADING:
VEHICLES UP TO 10,000kg "MEDIUM" TRAFFIC TABLE 3.1(g) NZS 1170.1, 5kPA / 31kN.
CONTRACTOR AND TANK OWNER TO ENSURE TANK POSITION DOES NOT EXPOSE THE TANK TO LOADS GREATER THAN SPECIFIED IN THESE DRAWINGS FOR THE DESIGN LIFE OF THE UNIT.

NOTE:
THIS SHEET IS FOR THE INSTALLATION OF TANKS REQUIRING ANCHOR PADS AS DETERMINED THROUGH "DEVAN PLASTICS stormVAULT UNDERGROUND CYLINDRICAL TANKS TOOLBOX VERSION 1.0 (OR HIGHER) CALCULATOR". IT IS THE RESPONSIBILITY OF THE CONTRACTOR AND OWNER TO ENSURE CORRECT TANK INSTALLATION IN ACCORDANCE WITH THE DEVAN INSTALLATION GUIDES AND DRAWINGS.

| REV | ISSUE | Date |
|---|---|---|
| 1 | FOR CONSTRUCTION | 16.04.25 |
| 0 | FOR CONSTRUCTION | 01.11.24 |

| | |
|---|---|
| DESIGNED | SK |
| CHECKED | SK/RR |
| DRAWN | AS |

Contact SENZ when in doubt. Refer to Architectural Drawings for set out, do not scale Structural Engineering Drawings


Business Address: L1, 52 Highbrook Drive, East Tamaki, Auckland 2013
Phone Number: +64 9 275 6029
Evening Number: +64 9 889 9350
E-mail Address: info@structural-engs.co.nz
Website: www.structural-engs.co.nz
SENZ Structural Engineers New Zealand


CLIENT DEVAN

PROJECT
**DEVAN PLASTICS STANDARD DESIGN FOR UNDERGROUND TANKS**

SHEET TITLE
**RESIDENTIAL TRAFFIC LOADING - SINGLE TANK INSTALLATION INSTRUCTIONS WITH ANCHORS - SLAB ON CLASS M EXPANSIVE SOIL**

FOR CONSTRUCTION

| SCALE | Drawing No. | REVISION |
|---|---|---|
| As indicated @ A3<br>1:A3x2 @ A1 | 059-003 -S-105 | 1 |

NOTE:
stormVAULT 800mm TANKS MAY BE DIRECTLY SUBSTITUTED WITH THE stormVAULT 1200mm TANKS, PROVIDED ALL DIMENSIONAL CONSTRAINTS IN THESE DRAWINGS ARE FOLLOWED.

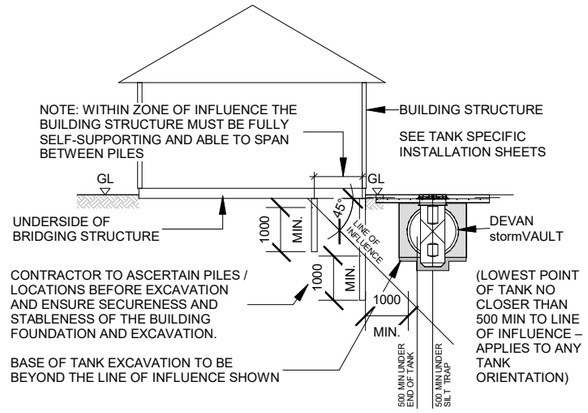


2 **TANK PLACEMENT NEAR PILED FOUNDATIONS**

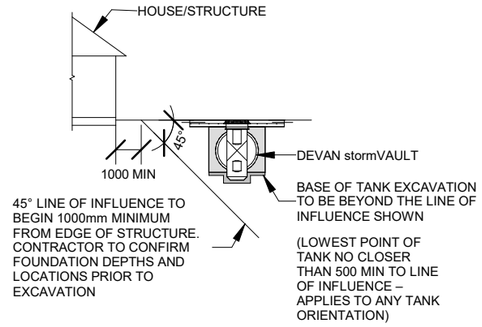


3 **TANK PLACEMENT NEAR BUILDING STRUCTURE**

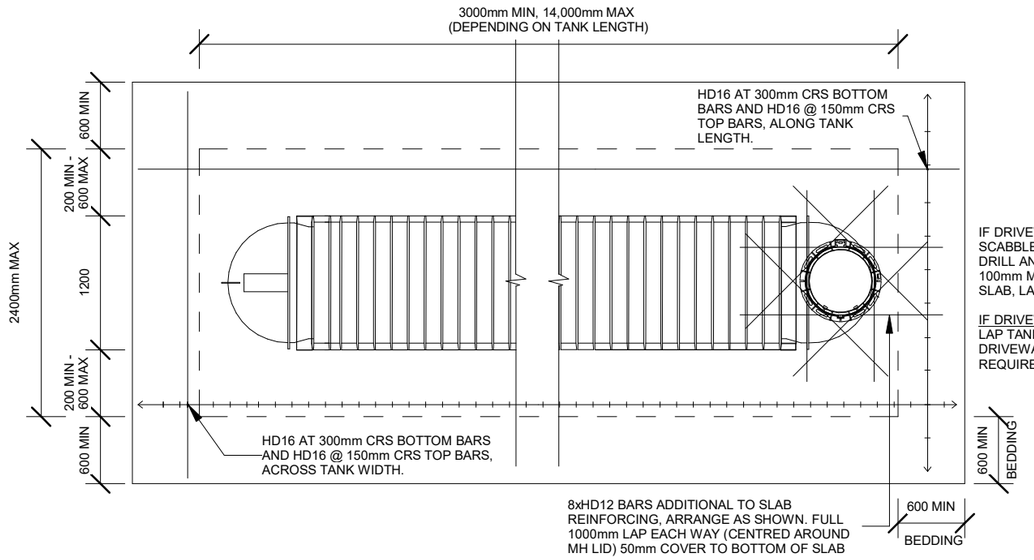


IF DRIVEWAY IS EXISTING:
SCABBLE EDGE AND TIE WITH D12 DRILL AND EPOXY STARTERS AT 400mm CRS. 100mm MIN EMBEDMENT DEPTH INTO EXISTING SLAB, LAP 600mm INTO NEW TOPPING SLAB

IF DRIVEWAY IS NEW:
LAP TANK TOPPING STEEL WITH GENERAL DRIVEWAY REINFORCING. FULL LAP LENGTH REQUIRED (REFER TO SPECIFICATION SHEET)

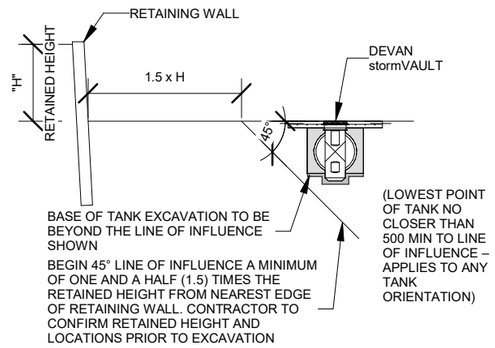


4 **TANK PLACEMENT NEAR RETAINING WALL**

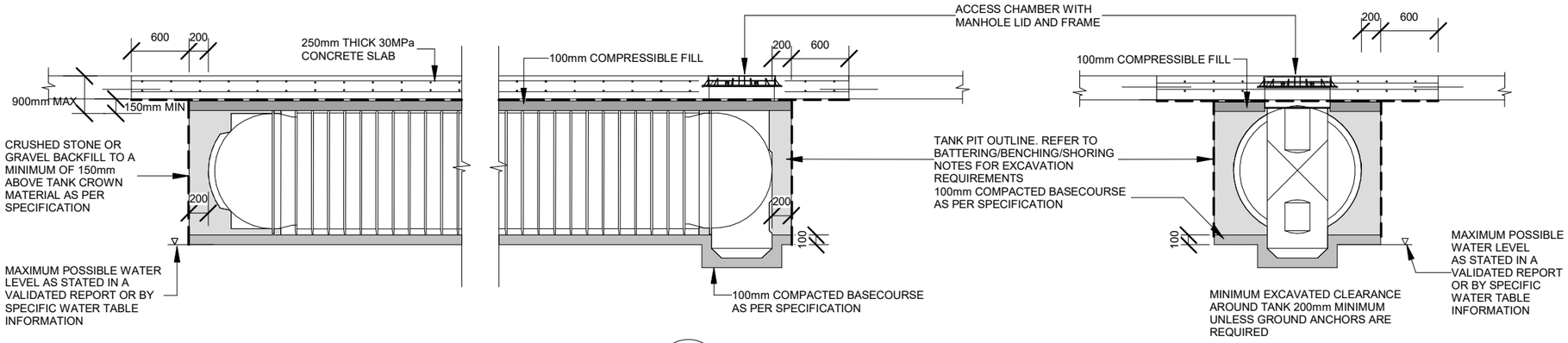


1 **1200mm DIAMETER TANK LOW WATER TABLE INSTALLATION**

NOTES:
- ALL DIMENSIONS IN MILLIMETRES UNO
- REFER TO STRUCTURAL SPECIFICATIONS SHEET OR CONCRETE REINFORCING & OTHER NOTES
- ALL LEVELS SHALL BE CONFIRMED BY THE CONTRACTOR PRIOR TO COMMENCEMENT OF WORK.
- ALL UNDERGROUND SERVICES SHALL BE CONFIRMED, LOCATED AND MARKED PRIOR TO ANY EXCAVATION WORKS,

- DEVAN PLASTICS LTD SHALL BE NOTIFIED IMMEDIATELY SHOULD ANY OF THE DESIGN PARAMETERS SHOWN ON THE DRAWINGS NOT BE ACHIEVABLE.

- REFER TO DEVAN PLASTICS LTD FOR MAXIMUM BURIAL DEPTH ALLOWANCES.

- TEMPORARY SUPPORT AND SHORING TO BE CARRIED OUT IN ACCORDANCE WITH WORKSAFE EXCAVATION SAFETY GUIDELINES.

- stormVAULT INSTALLATION TO BE CARRIED OUT IN CONJUCTION WITH DEVAN PRODUCT INFORMATION GUIDE AND THESE DRAWINGS

SOIL CONDITIONS
SITE SOIL CONDITIONS ALLOW FOR EXPANSIVE SOIL UP TO AND INCLUDING CLASS H2 AS DEFINED IN AS2870, PROVIDED AN ULTIMATE BEARING CAPACITY OF 300 KPA IS ACHIEVABLE FOR THE SUBGRADE DIRECTLY SUPPORTING THE SLAB AND THE BASECOURSE. NO ALLOWANCE FOR LIQUIFIABLE SOIL, OR SOIL WITH SLOPE STABILITY ISSUES. IT IS THE RESPONSIBILITY OF THE CONTRACTOR AND THE OWNER TO VERIFY THE SITE CONDITIONS PRIOR TO COMMENCING THE CONSTRUCTION WORKS.

TANK LOCATION - PROXIMITY TO NEARBY STRUCTURES:
IT IS THE CONTRACTOR AND OWNER'S RESPONSIBILITY TO ENSURE THAT THE LOCATION OF THE TANK WITH RESPECT TO ADJACENT STRUCTURES COMPLY WITH THE LIMITS AND RESTRICTIONS SET OUT IN THESE DRAWINGS. DEVAN PLASTICS LTD SHALL BE NOTIFIED IMMEDIATELY IF THOSE LIMITS ARE NOT ACHIEVABLE.

BACKFILL AND BASECOURSE:
GAP 10 or GAP 20 SHALL BE USED FOR BACKFILL AND BASECOURSE MATERIAL. ALTERNATIVE MATERIAL SHALL NOT BE USED WITHOUT THE WRITTEN APPROVAL OF DEVAN PLASTICS LTD.

CONTRACTOR SHALL BACKFILL LIFTS OF 150MM. THE CONTRACTOR SHALL USE THE APPROPRIATE TOOLS AND CONSTRUCTION TECHNIQUES TO ENSURE ALL VOIDS ARE FILLED ALONG THE FULL LENGTH OF THE TANK, ENSURING SUFFICIENT SUPPORT.

BATTERING/BENCHING/SHORING:
MANAGING THE STABILITY OF THE TRENCH DURING EXCAVATION IS THE RESPONSIBILITY OF THE CONTRACTOR, AND SHALL BE CARRIED OUT WITH THE RELEVANT GUIDELINES AND BEST PRACTICES IN ACCORDANCE WITH THE HEALTH AND SAFETY AT WORK ACT 2015. THIS INCLUDES, BUT NOT LIMITED TO, ANY EXCAVATIONS DEEPER THAN 1.5M. THE CONTRACTOR SHALL CONSULT WITH SUITABLE INDUSTRY PROFESIONALS SHOULD FURTHER GUIDANCE BE REQUIRED FOR BENCHING, BATTERING, AND SHORING.

LOADING:
VEHICLES UP TO 10,000kg "MEDIUM" TRAFFIC TABLE 3.1(g) NZS 1170.1, 5kPA / 31kN.
CONTRACTOR AND TANK OWNER TO ENSURE TANK POSITION DOES NOT EXPOSE THE TANK TO LOADS GREATER THAN SPECIFIED IN THESE DRAWINGS FOR THE DESIGN LIFE OF THE UNIT.

NOTE:
THIS SHEET IS FOR THE INSTALLATION OF TANKS ABOVE MAXIMUM POSSIBLE WATER TABLE LEVELS OR FOR INSTALLATIONS NOT REQUIRING ANCHOR PADS AS DETERMINED THROUGH "DEVAN PLASTICS stormVAULT UNDERGROUND CYLINDRICAL TANKS TOOLBOX VERSION 1.0" (OR HIGHER) CALCULATOR". IF TANKS ARE BEING INSTALLED ABOVE MAXIMUM POSSIBLE WATER TABLE LEVELS THEN SITE SPECIFIC REPORTS OR WATER TABLE INFORMATION MUST PROVE THE WATER LEVEL CAN NOT POSSIBLY RISE ABOVE THE BOTTOM OF THE EXCAVATION. IF THIS INFORMATION CAN NOT BE PROVIDED, REFER TO SHEET 059-003-S-107. IT IS THE RESPONSIBILITY OF THE CONTRACTOR AND OWNER TO ENSURE CORRECT TANK INSTALLATION IN ACCORDANCE WITH THE DEVAN INSTALLATION GUIDES AND DRAWINGS.

| REV | ISSUE | Date |
|---|---|---|
| 1 | FOR CONSTRUCTION | 16.04.25 |
| 0 | FOR CONSTRUCTION | 01.11.24 |

| | | |
|---|---|---|
| DESIGNED | SK | Contact SENZ when in doubt. Refer to Architectural Drawings for set out, do not scale Structural Engineering Drawings |
| CHECKED | SK/RR | Business Address: L1, 52 Highbrook Drive, East Tamaki, Auckland 2013 |
| DRAWN | AS | Phone Number: +64 9 275 6029<br>Evening Number: +64 9 889 9350<br>E-mail Address: info@structural-engs.co.nz<br>Website: www.structural-engs.co.nz |

SENZ Structural Engineers New Zealand

CLIENT DEVAN

PROJECT
**DEVAN PLASTICS STANDARD DESIGN FOR UNDERGROUND TANKS**

FOR CONSTRUCTION

SHEET TITLE
**RESIDENTIAL TRAFFIC LOADING WITHOUT ANCHORS - SINGLE TANK INSTALLATION INSTRUCTIONS - SLAB ON CLASS H2 EXPANSIVE SOIL**

| SCALE | Drawing No. | REVISION |
|---|---|---|
| As indicated @ A3<br>1:A3x2 @ A1 | 059-003 -S-106 | 1 |

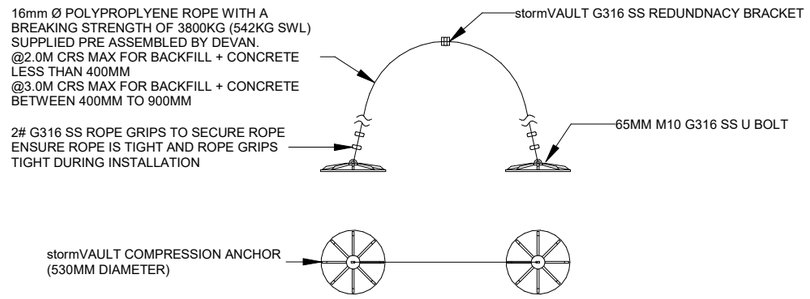


1 S-107 **DETAIL**

NOTE:
stormVAULT 800mm TANKS MAY BE DIRECTLY SUBSTITUTED WITH THE stormVAULT 1200mm TANKS, PROVIDED ALL DIMENSIONAL CONSTRAINTS IN THESE DRAWINGS ARE FOLLOWED.

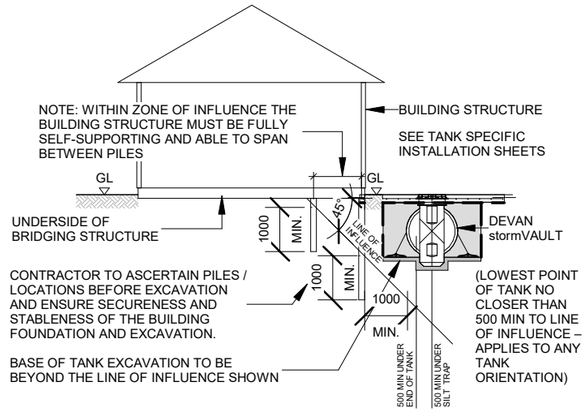


3 **TANK PLACEMENT NEAR PILED FOUNDATIONS**

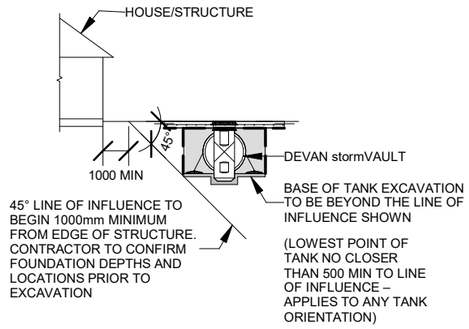


4 **TANK PLACEMENT NEAR BUILDING STRUCTURE**

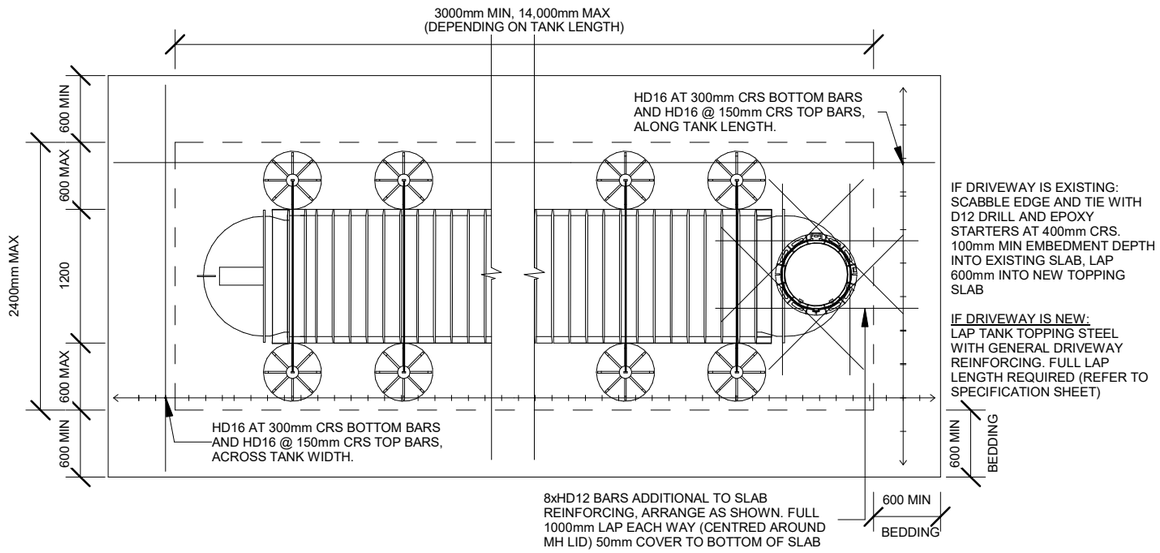


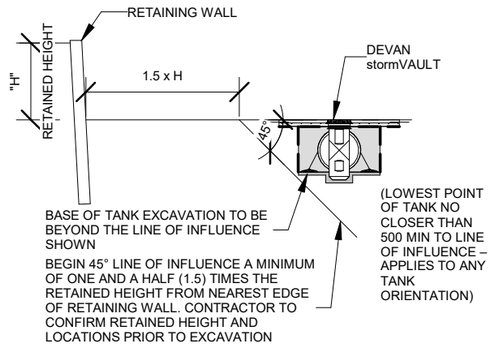


5 **TANK PLACEMENT NEAR RETAINING WALL**

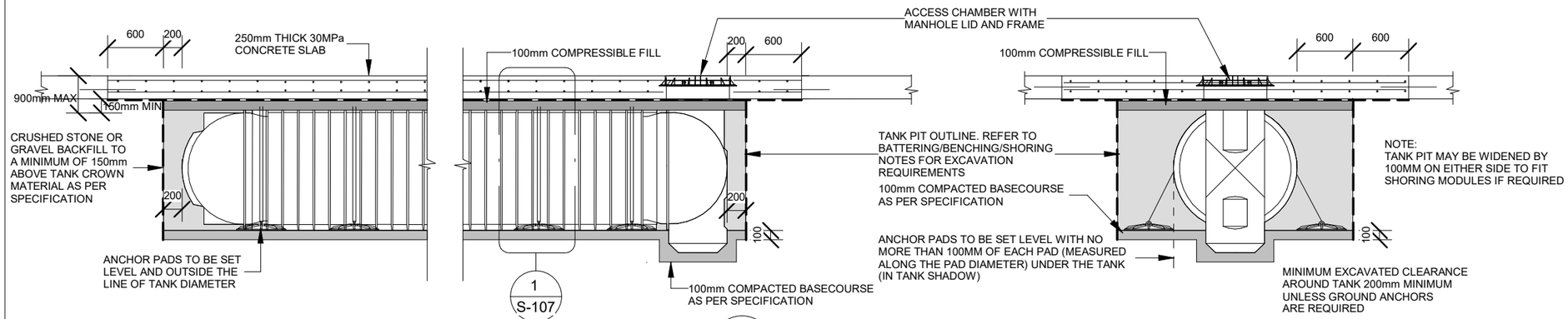


2 **1200mm DIAMETER TANK ANCHORED INSTALLATION**

NOTES:
- ALL DIMENSIONS IN MILLIMETRES UNO
- REFER TO STRUCTURAL SPECIFICATIONS SHEET OR CONCRETE REINFORCING & OTHER NOTES
- ALL LEVELS SHALL BE CONFIRMED BY THE CONTRACTOR PRIOR TO COMMENCEMENT OF WORK.
- ALL UNDERGROUND SERVICES SHALL BE CONFIRMED, LOCATED AND MARKED PRIOR TO ANY EXCAVATION WORKS,

- DEVAN PLASTICS LTD SHALL BE NOTIFIED IMMEDIATELY SHOULD ANY OF THE DESIGN PARAMETERS SHOWN ON THE DRAWINGS NOT BE ACHIEVABLE.

- REFER TO DEVAN PLASTICS LTD FOR MAXIMUM BURIAL DEPTH ALLOWANCES.

- TEMPORARY SUPPORT AND SHORING TO BE CARRIED OUT IN ACCORDANCE WITH WORKSAFE EXCAVATION SAFETY GUIDELINES.

- stormVAULT INSTALLATION TO BE CARRIED OUT IN CONJUCTION WITH DEVAN PRODUCT INFORMATION GUIDE AND THESE DRAWINGS

SOIL CONDITIONS
SITE SOIL CONDITIONS ALLOW FOR EXPANSIVE SOIL UP TO AND INCLUDING CLASS H2 AS DEFINED IN AS2870, PROVIDED AN ULTIMATE BEARING CAPACITY OF 300 KPA IS ACHIEVABLE FOR THE SUBGRADE DIRECTLY SUPPORTING THE SLAB AND THE BASECOURSE. NO ALLOWANCE FOR LIQUIFIABLE SOIL, OR SOIL WITH SLOPE STABILITY ISSUES. IT IS THE RESPONSIBILITY OF THE CONTRACTOR AND THE OWNER TO VERIFY THE SITE CONDITIONS PRIOR TO COMMENCING THE CONSTRUCTION WORKS.

TANK LOCATION - PROXIMITY TO NEARBY STRUCTURES:
IT IS THE CONTRACTOR AND OWNER'S RESPONSIBILITY TO ENSURE THAT THE LOCATION OF THE TANK WITH RESPECT TO ADJACENT STRUCTURES COMPLY WITH THE LIMITS AND RESTRICTIONS SET OUT IN THESE DRAWINGS. DEVAN PLASTICS LTD SHALL BE NOTIFIED IMMEDIATELY IF THOSE LIMITS ARE NOT ACHIEVABLE.

BACKFILL AND BASECOURSE:
GAP 10 or GAP 20 SHALL BE USED FOR BACKFILL AND BASECOURSE MATERIAL. ALTERNATIVE MATERIAL SHALL NOT BE USED WITHOUT THE WRITTEN APPROVAL OF DEVAN PLASTICS LTD.

CONTRACTOR SHALL BACKFILL LIFTS OF 150MM. THE CONTRACTOR SHALL USE THE APPROPRIATE TOOLS AND CONSTRUCTION TECHNIQUES TO ENSURE ALL VOIDS ARE FILLED ALONG THE FULL LENGTH OF THE TANK, ENSURING SUFFICIENT SUPPORT.

BATTERING/BENCHING/SHORING:
MANAGING THE STABILITY OF THE TRENCH DURING EXCAVATION IS THE RESPONSIBILITY OF THE CONTRACTOR, AND SHALL BE CARRIED OUT WITH THE RELEVANT GUIDELINES AND BEST PRACTICES IN ACCORDANCE WITH THE HEALTH AND SAFETY AT WORK ACT 2015. THIS INCLUDES, BUT NOT LIMITED TO, ANY EXCAVATIONS DEEPER THAN 1.5M. THE CONTRACTOR SHALL CONSULT WITH SUITABLE INDUSTRY PROFESIONALS SHOULD FURTHER GUIDANCE BE REQUIRED FOR BENCHING, BATTERING, AND SHORING.

LOADING:
VEHICLES UP TO 10,000kg "MEDIUM" TRAFFIC TABLE 3.1(g) NZS 1170.1, 5kPA / 31kN.
CONTRACTOR AND TANK OWNER TO ENSURE TANK POSITION DOES NOT EXPOSE THE TANK TO LOADS GREATER THAN SPECIFIED IN THESE DRAWINGS FOR THE DESIGN LIFE OF THE UNIT.

NOTE:
THIS SHEET IS FOR THE INSTALLATION OF TANKS REQUIRING ANCHOR PADS AS DETERMINED THROUGH "DEVAN PLASTICS stormVAULT UNDERGROUND CYLINDRICAL TANKS TOOLBOX VERSION 1.0 (OR HIGHER) CALCULATOR". IT IS THE RESPONSIBILITY OF THE CONTRACTOR AND OWNER TO ENSURE CORRECT TANK INSTALLATION IN ACCORDANCE WITH THE DEVAN INSTALLATION GUIDES AND DRAWINGS.

| REV | ISSUE | Date |
|---|---|---|
| 1 | FOR CONSTRUCTION | 16.04.25 |
| 0 | FOR CONSTRUCTION | 01.11.24 |

| | |
|---|---|
| DESIGNED | SK |
| CHECKED | SK/RR |
| DRAWN | AS |

Contact SENZ when in doubt. Refer to Architectural Drawings for set out, do not scale Structural Engineering Drawings

Business Address: L1, 52 Highbrook Drive, East Tamaki, Auckland 2013
Phone Number: +64 9 275 6029
Evening Number: +64 9 889 9350
E-mail Address: info@structural-engs.co.nz
Website: www.structural-engs.co.nz

SENZ Structural Engineers New Zealand

CLIENT DEVAN

PROJECT
**DEVAN PLASTICS STANDARD DESIGN FOR UNDERGROUND TANKS**

SHEET TITLE
**RESIDENTIAL TRAFFIC LOADING - SINGLE TANK INSTALLATION INSTRUCTIONS WITH ANCHORS - SLAB ON CLASS H2 EXPANSIVE SOIL**

FOR CONSTRUCTION

| SCALE | Drawing No. | REVISION |
|---|---|---|
| As indicated @ A3<br>1:A3x2 @ A1 | 059-003 -S-107 | 1 |

NOTE:
stormVAULT 800mm TANKS MAY BE DIRECTLY SUBSTITUTED WITH THE stormVAULT 1200mm TANKS, PROVIDED ALL DIMENSIONAL CONSTRAINTS IN THESE DRAWINGS ARE FOLLOWED.

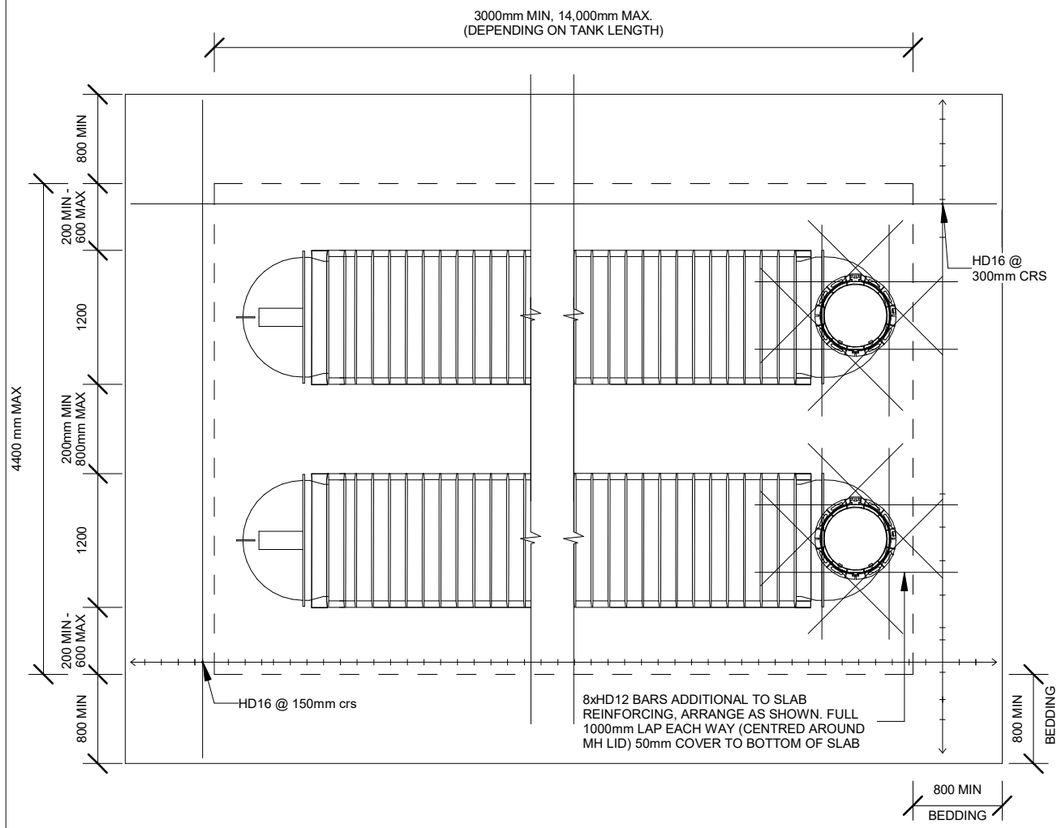


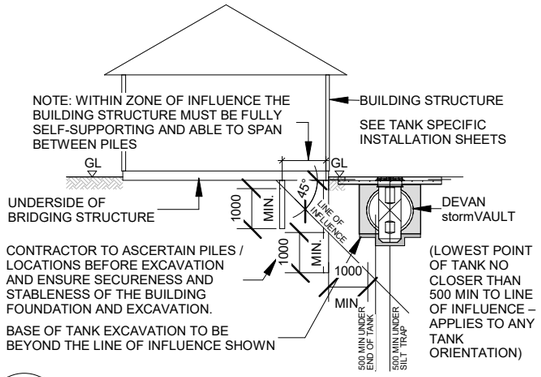


2 **TANK PLACEMENT NEAR PILED FOUNDATIONS**

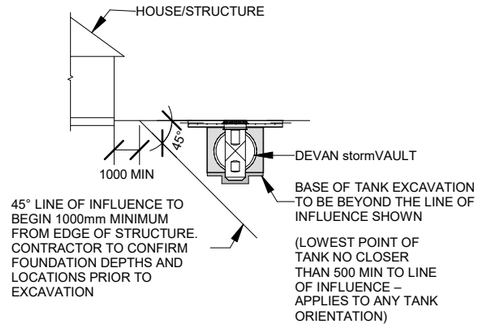


3 **TANK PLACEMENT NEAR BUILDING STRUCTURE**

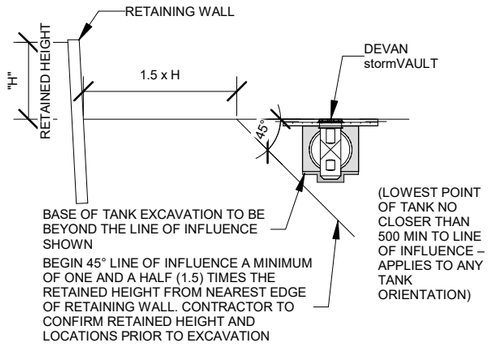


4 **TANK PLACEMENT NEAR RETAINING WALL**

IF DRIVEWAY IS EXISTING:
SCABBLE EDGE AND TIE WITH D12 DRILL AND EPOXY STARTERS AT 400mm CRS. 100mm MIN EMBEDMENT DEPTH INTO EXISTING SLAB, LAP 600mm INTO NEW TOPPING SLAB

IF DRIVEWAY IS NEW:
LAP TANK TOPPING STEEL WITH GENERAL DRIVEWAY REINFORCING. FULL LAP LENGTH REQUIRED (REFER TO SPECIFICATION SHEET)

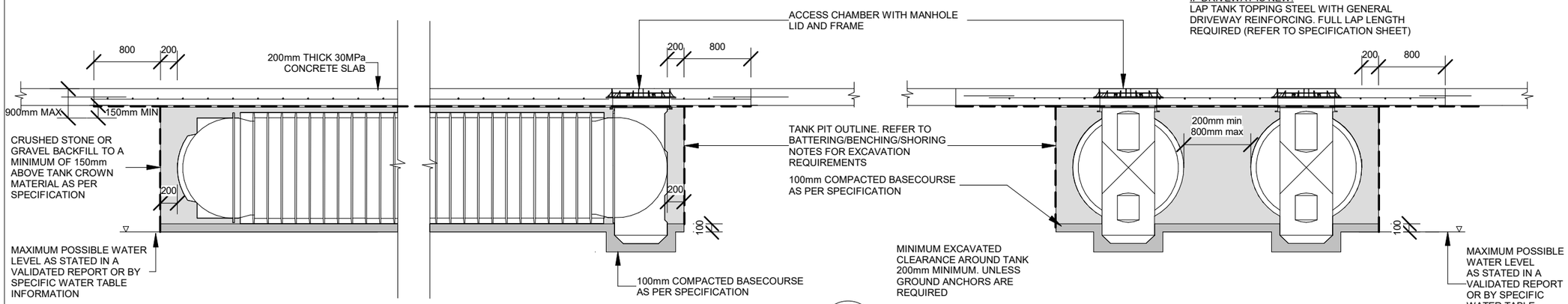


1 **1200mm DIAMETER TANK SIDE BY SIDE INSTALLATION**

NOTES:
- ALL DIMENSIONS IN MILLIMETRES UNO
- REFER TO STRUCTURAL SPECIFICATIONS SHEET OR CONCRETE REINFORCING & OTHER NOTES
- ALL LEVELS SHALL BE CONFIRMED BY THE CONTRACTOR PRIOR TO COMMENCEMENT OF WORK.
- ALL UNDERGROUND SERVICES SHALL BE CONFIRMED, LOCATED AND MARKED PRIOR TO ANY EXCAVATION WORKS,

- DEVAN PLASTICS LTD SHALL BE NOTIFIED IMMEDIATELY SHOULD ANY OF THE DESIGN PARAMETERS SHOWN ON THE DRAWINGS NOT BE ACHIEVABLE.

- REFER TO DEVAN PLASTICS LTD FOR MAXIMUM BURIAL DEPTH ALLOWANCES.

- TEMPORARY SUPPORT AND SHORING TO BE CARRIED OUT IN ACCORDANCE WITH WORKSAFE EXCAVATION SAFETY GUIDELINES.

- stormVAULT INSTALLATION TO BE CARRIED OUT IN CONJUCTION WITH DEVAN PRODUCT INFORMATION GUIDE AND THESE DRAWINGS

SOIL CONDITIONS
SITE SOIL CONDITIONS ARE CONSISTENT WITH "GOOD GROUND" AS DEFINED IN NZS3604:2011. i.e. NO ALLOWANCE FOR EXPANSIVE OR LIQUIFIABLE SOIL, OR SOIL WITH SLOPE STABILITY ISSUES. IT IS THE RESPONSIBILITY OF THE CONTRACTOR AND THE OWNER TO VERIFY THE SITE CONDITIONS PRIOR TO COMMENCING THE CONSTRUCTION WORKS.

TANK LOCATION - PROXIMITY TO NEARBY STRUCTURES:
IT IS THE CONTRACTOR AND OWNER'S RESPONSIBILITY TO ENSURE THAT THE LOCATION OF THE TANK WITH RESPECT TO ADJACENT STRUCTURES COMPLY WITH THE LIMITS AND RESTRICTIONS SET OUT IN THESE DRAWINGS. DEVAN PLASTICS LTD SHALL BE NOTIFIED IMMEDIATELY IF THOSE LIMITS ARE NOT ACHIEVABLE.

BACKFILL AND BASECOURSE:
GAP 10 or GAP 20 SHALL BE USED FOR BACKFILL AND BASECOURSE MATERIAL. ALTERNATIVE MATERIAL SHALL NOT BE USED WITHOUT THE WRITTEN APPROVAL OF DEVAN PLASTICS LTD.

CONTRACTOR SHALL BACKFILL LIFTS OF 150MM. THE CONTRACTOR SHALL USE THE APPROPRIATE TOOLS AND CONSTRUCTION TECHNIQUES TO ENSURE ALL VOIDS ARE FILLED ALONG THE FULL LENGTH OF THE TANK, ENSURING SUFFICIENT SUPPORT.

BATTERING/BENCHING/SHORING:
MANAGING THE STABILITY OF THE TRENCH DURING EXCAVATION IS THE RESPONSIBILITY OF THE CONTRACTOR, AND SHALL BE CARRIED OUT WITH THE RELEVANT GUIDELINES AND BEST PRACTICES IN ACCORDANCE WITH THE HEALTH AND SAFETY AT WORK ACT 2015. THIS INCLUDES, BUT NOT LIMITED TO, ANY EXCAVATIONS DEEPER THAN 1.5M. THE CONTRACTOR SHALL CONSULT WITH SUITABLE INDUSTRY PROFESIONALS SHOULD FURTHER GUIDANCE BE REQUIRED FOR BENCHING, BATTERING, AND SHORING.

LOADING:
VEHICLES UP TO 10,000kg "MEDIUM" TRAFFIC TABLE 3.1(g) NZS 1170.1, 5kPA / 31kN.
CONTRACTOR AND TANK OWNER TO ENSURE TANK POSITION DOES NOT EXPOSE THE TANK TO LOADS GREATER THAN SPECIFIED IN THESE DRAWINGS FOR THE DESIGN LIFE OF THE UNIT.

NOTE:
THIS SHEET IS FOR THE INSTALLATION OF TANKS ABOVE MAXIMUM POSSIBLE WATER TABLE LEVELS OR FOR INSTALLATIONS NOT REQUIRING ANCHOR PADS AS DETERMINED THROUGH "DEVAN PLASTICS stormVAULT UNDERGROUND CYLINDRICAL TANKS TOOLBOX VERSION 1.0 (OR HIGHER) CALCULATOR". IF TANKS ARE BEING INSTALLED ABOVE MAXIMUM POSSIBLE WATER TABLE LEVELS THEN SITE SPECIFIC REPORTS OR WATER TABLE INFORMATION MUST PROVE THE WATER LEVEL CAN NOT POSSIBLY RISE ABOVE THE BOTTOM OF THE EXCAVATION. IF THIS INFORMATION CAN NOT BE PROVIDED, REFER TO SHEET 059-003-S-201. IT IS THE RESPONSIBILITY OF THE CONTRACTOR AND OWNER TO ENSURE CORRECT TANK INSTALLATION IN ACCORDANCE WITH THE DEVAN INSTALLATION GUIDES AND DRAWINGS.

| REV | ISSUE | Date |
|---|---|---|
| 1 | FOR CONSTRUCTION | 16.04.25 |
| 0 | FOR CONSTRUCTION | 01.11.24 |

| | | |
|---|---|---|
| DESIGNED | SK | Contact SENZ when in doubt. Refer to Architectural Drawings for set out, do not scale Structural Engineering Drawings |
| CHECKED | SK/RR | |
| DRAWN | AS | |


Business Address: L1, 52 Highbrook Drive, East Tamaki, Auckland 2013
Phone Number: +64 9 275 6029
Evening Number: +64 9 889 9350
E-mail Address: info@structural-engs.co.nz
Website: www.structural-engs.co.nz
SENZ Structural Engineers New Zealand


CLIENT
DEVAN

PROJECT
**DEVAN PLASTICS STANDARD DESIGN FOR UNDERGROUND TANKS**

FOR CONSTRUCTION

SHEET TITLE
**RESIDENTIAL TRAFFIC LOADING WITHOUT ANCHORS - DOUBLE TANK INSTALLATION INSTRUCTIONS - SLAB ON GOOD GROUND**

| SCALE | Drawing No. | REVISION |
|---|---|---|
| As indicated @ A3<br>1:A3x2 @ A1 | 059-003 -S-200 | 1 |

NOTE:
stormVAULT 800mm TANKS MAY BE DIRECTLY SUBSTITUTED WITH THE stormVAULT 1200mm TANKS, PROVIDED ALL DIMENSIONAL CONSTRAINTS IN THESE DRAWINGS ARE FOLLOWED.

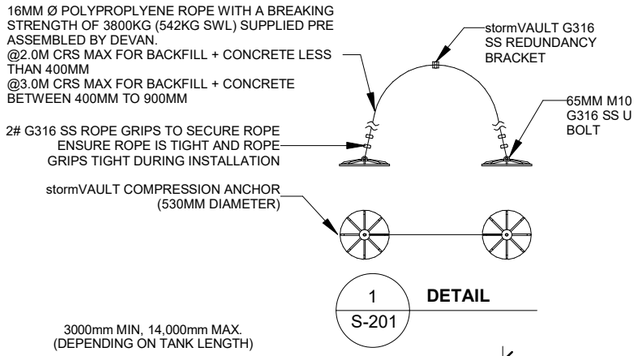


1 S-201 **DETAIL**

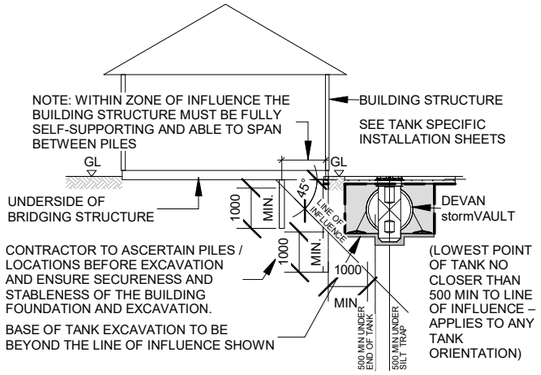


3 **TANK PLACEMENT NEAR PILED FOUNDATIONS**

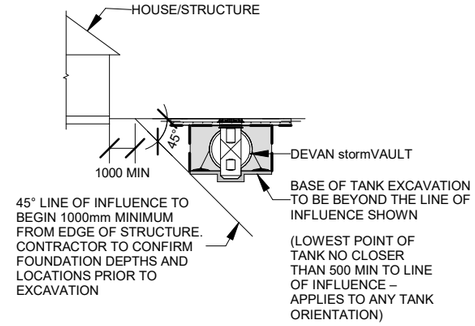


4 **TANK PLACEMENT NEAR BUILDING STRUCTURE**

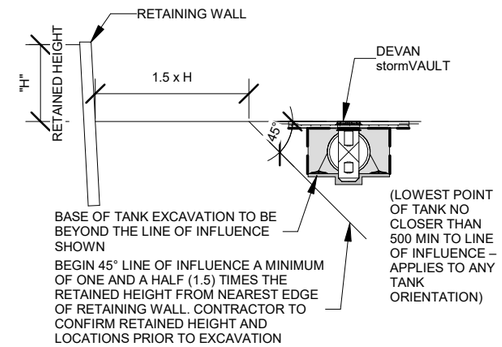


5 **TANK PLACEMENT NEAR RETAINING WALL**

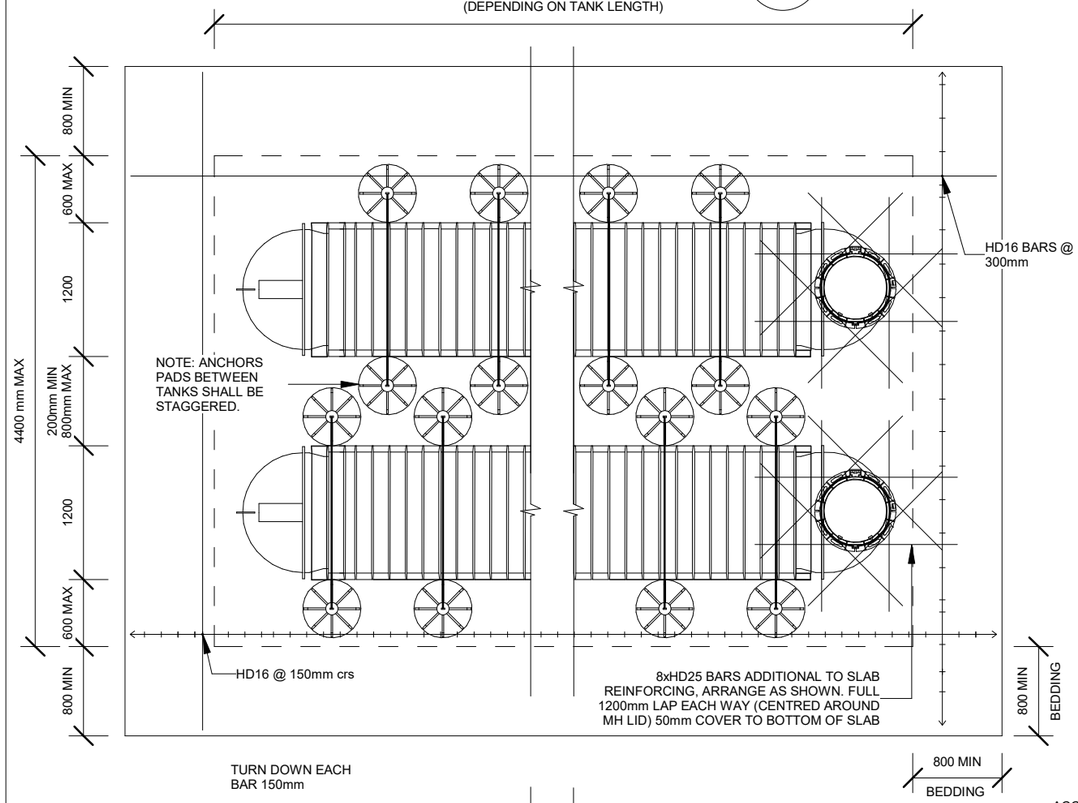


IF DRIVEWAY IS EXISTING:
SCABBLE EDGE AND TIE WITH D12 DRILL AND EPOXY STARTERS AT 400mm CRS. 100mm MIN EMBEDMENT DEPTH INTO EXISTING SLAB, LAP 600mm INTO NEW TOPPING SLAB

IF DRIVEWAY IS NEW:
LAP TANK TOPPING STEEL WITH GENERAL DRIVEWAY REINFORCING. FULL LAP LENGTH REQUIRED (REFER TO SPECIFICATION SHEET)

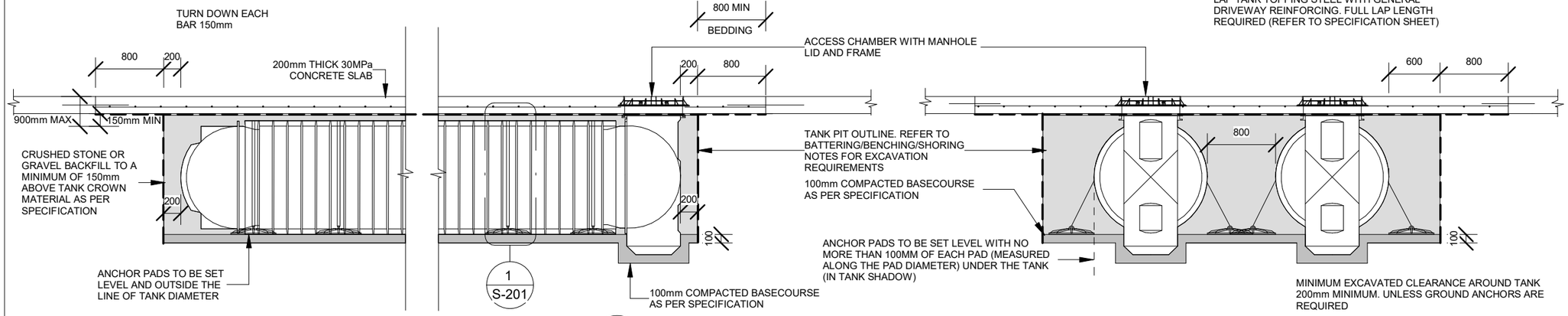


2 **1200mm DIAMETER TANK SIDE BY SIDE ANCHORED INSTALLATION**

NOTES:
- ALL DIMENSIONS IN MILLIMETRES UNO
- REFER TO STRUCTURAL SPECIFICATIONS SHEET OR CONCRETE REINFORCING & OTHER NOTES
- ALL LEVELS SHALL BE CONFIRMED BY THE CONTRACTOR PRIOR TO COMMENCEMENT OF WORK.
- ALL UNDERGROUND SERVICES SHALL BE CONFIRMED, LOCATED AND MARKED PRIOR TO ANY EXCAVATION WORKS,

- DEVAN PLASTICS LTD SHALL BE NOTIFIED IMMEDIATELY SHOULD ANY OF THE DESIGN PARAMETERS SHOWN ON THE DRAWINGS NOT BE ACHIEVABLE.

- REFER TO DEVAN PLASTICS LTD FOR MAXIMUM BURIAL DEPTH ALLOWANCES.

- TEMPORARY SUPPORT AND SHORING TO BE CARRIED OUT IN ACCORDANCE WITH WORKSAFE EXCAVATION SAFETY GUIDELINES.

- stormVAULT INSTALLATION TO BE CARRIED OUT IN CONJUCTION WITH DEVAN PRODUCT INFORMATION GUIDE AND THESE DRAWINGS

SOIL CONDITIONS
SITE SOIL CONDITIONS ARE CONSISTENT WITH "GOOD GROUND" AS DEFINED IN NZS3604:2011. i.e. NO ALLOWANCE FOR EXPANSIVE OR LIQUIFIABLE SOIL, OR SOIL WITH SLOPE STABILITY ISSUES. IT IS THE RESPONSIBILITY OF THE CONTRACTOR AND THE OWNER TO VERIFY THE SITE CONDITIONS PRIOR TO COMMENCING THE CONSTRUCTION WORKS.

TANK LOCATION - PROXIMITY TO NEARBY STRUCTURES:
IT IS THE CONTRACTOR AND OWNER'S RESPONSIBILITY TO ENSURE THAT THE LOCATION OF THE TANK WITH RESPECT TO ADJACENT STRUCTURES COMPLY WITH THE LIMITS AND RESTRICTIONS SET OUT IN THESE DRAWINGS. DEVAN PLASTICS LTD SHALL BE NOTIFIED IMMEDIATELY IF THOSE LIMITS ARE NOT ACHIEVABLE.

BACKFILL AND BASECOURSE:
GAP 10 or GAP 20 SHALL BE USED FOR BACKFILL AND BASECOURSE MATERIAL. ALTERNATIVE MATERIAL SHALL NOT BE USED WITHOUT THE WRITTEN APPROVAL OF DEVAN PLASTICS LTD.

CONTRACTOR SHALL BACKFILL LIFTS OF 150MM. THE CONTRACTOR SHALL USE THE APPROPRIATE TOOLS AND CONSTRUCTION TECHNIQUES TO ENSURE ALL VOIDS ARE FILLED ALONG THE FULL LENGTH OF THE TANK, ENSURING SUFFICIENT SUPPORT.

BATTERING/BENCHING/SHORING:
MANAGING THE STABILITY OF THE TRENCH DURING EXCAVATION IS THE RESPONSIBILITY OF THE CONTRACTOR, AND SHALL BE CARRIED OUT WITH THE RELEVANT GUIDELINES AND BEST PRACTICES IN ACCORDANCE WITH THE HEALTH AND SAFETY AT WORK ACT 2015. THIS INCLUDES, BUT NOT LIMITED TO, ANY EXCAVATIONS DEEPER THAN 1.5M. THE CONTRACTOR SHALL CONSULT WITH SUITABLE INDUSTRY PROFESIONALS SHOULD FURTHER GUIDANCE BE REQUIRED FOR BENCHING, BATTERING, AND SHORING.

LOADING:
VEHICLES UP TO 10,000kg "MEDIUM" TRAFFIC TABLE 3.1(g) NZS 1170.1, 5kPA / 31kN.
CONTRACTOR AND TANK OWNER TO ENSURE TANK POSITION DOES NOT EXPOSE THE TANK TO LOADS GREATER THAN SPECIFIED IN THESE DRAWINGS FOR THE DESIGN LIFE OF THE UNIT.

NOTE:
THIS SHEET IS FOR THE INSTALLATION OF TANKS REQUIRING ANCHOR PADS AS DETERMINED THROUGH "DEVAN PLASTICS stormVAULT UNDERGROUND CYLINDRICAL TANKS TOOLBOX VERSION 1.0 (OR HIGHER) CALCULATOR". IT IS THE RESPONSIBILITY OF THE CONTRACTOR AND OWNER TO ENSURE CORRECT TANK INSTALLATION IN ACCORDANCE WITH THE DEVAN INSTALLATION GUIDES AND DRAWINGS.

| REV | ISSUE | Date |
|---|---|---|
| 1 | FOR CONSTRUCTION | 16.04.25 |
| 0 | FOR CONSTRUCTION | 01.11.24 |

| | | |
|---|---|---|
| DESIGNED | SK | Contact SENZ when in doubt. Refer to Architectural Drawings for set out, do not scale Structural Engineering Drawings |
| CHECKED | SK/RR | Business Address: L1, 52 Highbrook Drive, East Tamaki, Auckland 2013 |
| DRAWN | AS | Phone Number: +64 9 275 6029<br>Evening Number: +64 9 889 9350<br>E-mail Address: info@structural-engs.co.nz<br>Website: www.structural-engs.co.nz |

SENZ Structural Engineers New Zealand

CLIENT DEVAN

PROJECT
**DEVAN PLASTICS STANDARD DESIGN FOR UNDERGROUND TANKS**

SHEET TITLE
**RESIDENTIAL TRAFFIC LOADING - DOUBLE TANK INSTALLATION INSTRUCTIONS WITH ANCHORS - SLAB ON GOOD GROUND**

FOR CONSTRUCTION

| SCALE | Drawing No. | REVISION |
|---|---|---|
| As indicated @ A3<br>1:A3x2 @ A1 | 059-003 -S-201 | 1 |

NOTE:
stormVAULT 800mm TANKS MAY BE DIRECTLY SUBSTITUTED WITH THE stormVAULT 1200mm TANKS, PROVIDED ALL DIMENSIONAL CONSTRAINTS IN THESE DRAWINGS ARE FOLLOWED.

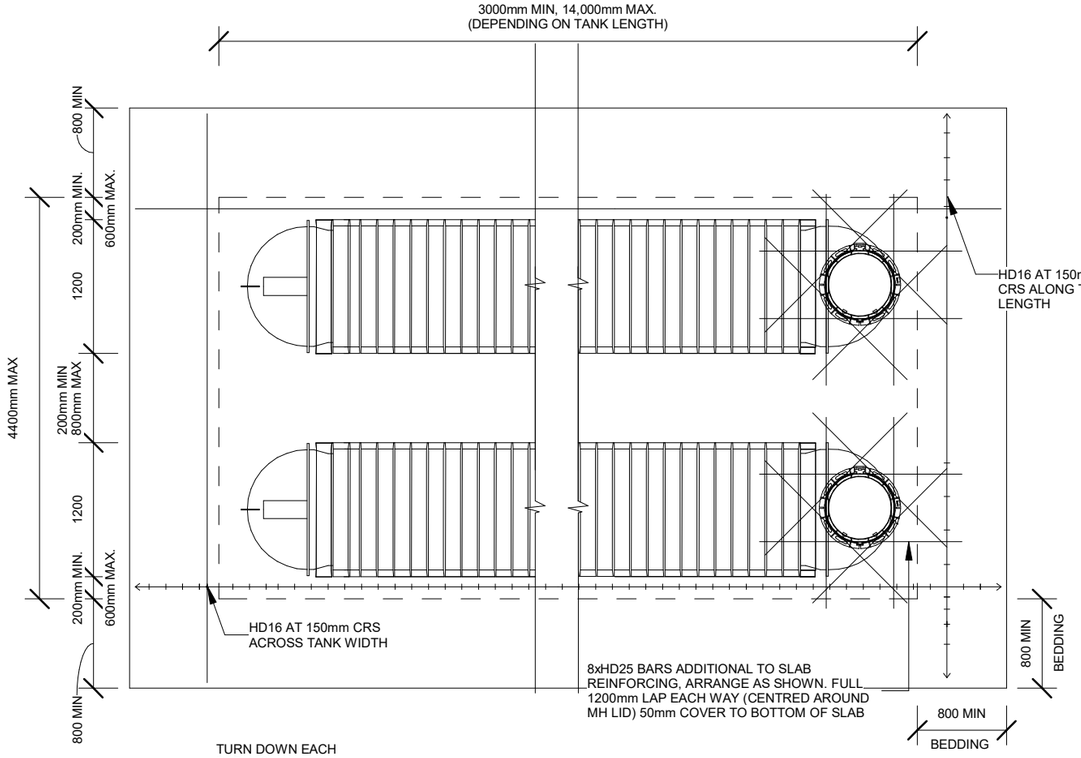


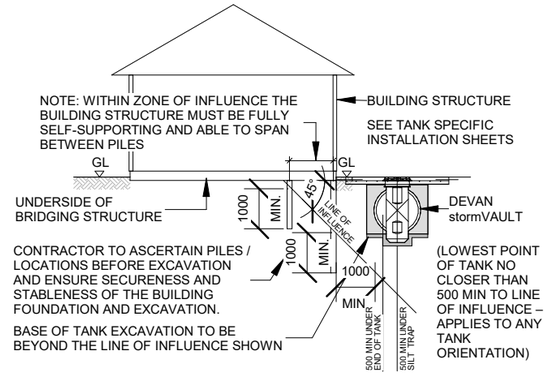


2 **TANK PLACEMENT NEAR PILED FOUNDATIONS**

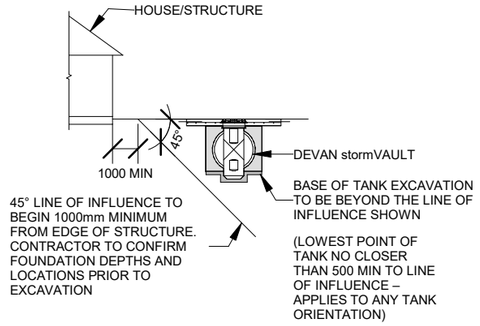


3 **TANK PLACEMENT NEAR BUILDING STRUCTURE**

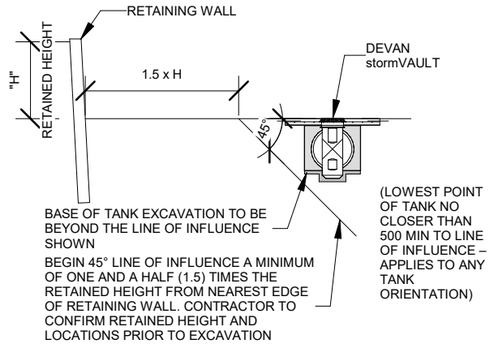


4 **TANK PLACEMENT NEAR RETAINING WALL**

IF DRIVEWAY IS EXISTING:
SCABBLE EDGE AND TIE WITH D12 DRILL AND EPOXY STARTERS AT 400mm CRS. 100mm MIN EMBEDMENT DEPTH INTO EXISTING SLAB, LAP 600mm INTO NEW TOPPING SLAB

IF DRIVEWAY IS NEW:
LAP TANK TOPPING STEEL WITH GENERAL DRIVEWAY REINFORCING. FULL LAP LENGTH REQUIRED (REFER TO SPECIFICATION SHEET)

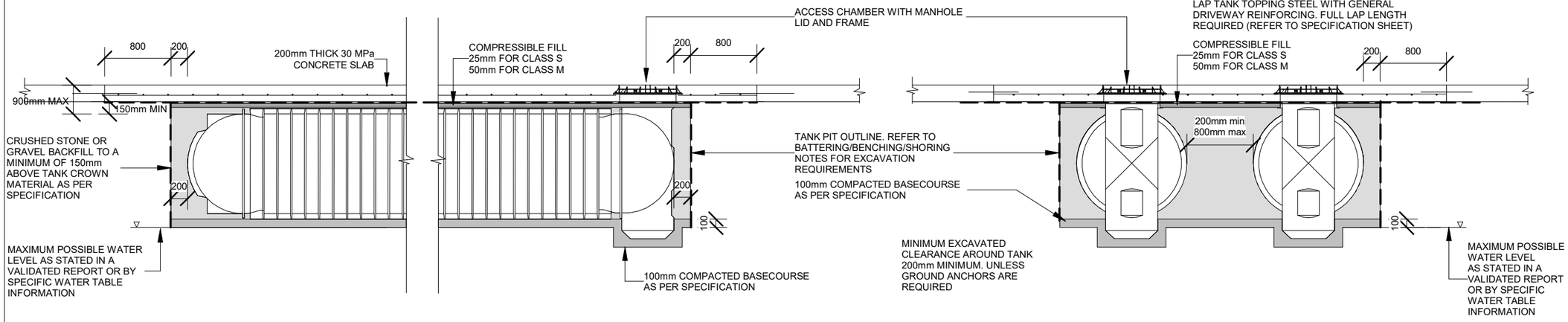


1 **1200mm DIAMETER TANK SIDE BY SIDE INSTALLATION**

NOTES:
- ALL DIMENSIONS IN MILLIMETRES UNO
- REFER TO STRUCTURAL SPECIFICATIONS SHEET OR CONCRETE REINFORCING & OTHER NOTES
- ALL LEVELS SHALL BE CONFIRMED BY THE CONTRACTOR PRIOR TO COMMENCEMENT OF WORK.
- ALL UNDERGROUND SERVICES SHALL BE CONFIRMED, LOCATED AND MARKED PRIOR TO ANY EXCAVATION WORKS,

- DEVAN PLASTICS LTD SHALL BE NOTIFIED IMMEDIATELY SHOULD ANY OF THE DESIGN PARAMETERS SHOWN ON THE DRAWINGS NOT BE ACHIEVABLE.

- REFER TO DEVAN PLASTICS LTD FOR MAXIMUM BURIAL DEPTH ALLOWANCES.

- TEMPORARY SUPPORT AND SHORING TO BE CARRIED OUT IN ACCORDANCE WITH WORKSAFE EXCAVATION SAFETY GUIDELINES.

- stormVAULT INSTALLATION TO BE CARRIED OUT IN CONJUCTION WITH DEVAN PRODUCT INFORMATION GUIDE AND THESE DRAWINGS

SOIL CONDITIONS
SITE SOIL CONDITIONS ALLOW FOR EXPANSIVE SOIL UP TO AND INCLUDING CLASS M AS DEFINED IN AS2870, PROVIDED AN ULTIMATE BEARING CAPACITY OF 300 KPA IS ACHIEVABLE FOR THE SUBGRADE DIRECTLY SUPPORTING THE SLAB AND THE BASECOURSE. NO ALLOWANCE FOR LIQUIFIABLE SOIL, OR SOIL WITH SLOPE STABILITY ISSUES. IT IS THE RESPONSIBILITY OF THE CONTRACTOR AND THE OWNER TO VERIFY THE SITE CONDITIONS PRIOR TO COMMENCING THE CONSTRUCTION WORKS.

TANK LOCATION - PROXIMITY TO NEARBY STRUCTURES:
IT IS THE CONTRACTOR AND OWNER'S RESPONSIBILITY TO ENSURE THAT THE LOCATION OF THE TANK WITH RESPECT TO ADJACENT STRUCTURES COMPLY WITH THE LIMITS AND RESTRICTIONS SET OUT IN THESE DRAWINGS. DEVAN PLASTICS LTD SHALL BE NOTIFIED IMMEDIATELY IF THOSE LIMITS ARE NOT ACHIEVABLE.

BACKFILL AND BASECOURSE:
GAP 10 or GAP 20 SHALL BE USED FOR BACKFILL AND BASECOURSE MATERIAL. ALTERNATIVE MATERIAL SHALL NOT BE USED WITHOUT THE WRITTEN APPROVAL OF DEVAN PLASTICS LTD.

CONTRACTOR SHALL BACKFILL LIFTS OF 150MM. THE CONTRACTOR SHALL USE THE APPROPRIATE TOOLS AND CONSTRUCTION TECHNIQUES TO ENSURE ALL VOIDS ARE FILLED ALONG THE FULL LENGTH OF THE TANK, ENSURING SUFFICIENT SUPPORT.

BATTERING/BENCHING/SHORING:
MANAGING THE STABILITY OF THE TRENCH DURING EXCAVATION IS THE RESPONSIBILITY OF THE CONTRACTOR, AND SHALL BE CARRIED OUT WITH THE RELEVANT GUIDELINES AND BEST PRACTICES IN ACCORDANCE WITH THE HEALTH AND SAFETY AT WORK ACT 2015. THIS INCLUDES, BUT NOT LIMITED TO, ANY EXCAVATIONS DEEPER THAN 1.5M. THE CONTRACTOR SHALL CONSULT WITH SUITABLE INDUSTRY PROFESIONALS SHOULD FURTHER GUIDANCE BE REQUIRED FOR BENCHING, BATTERING, AND SHORING.

LOADING:
VEHICLES UP TO 10,000kg "MEDIUM" TRAFFIC TABLE 3.1(g) NZS 1170.1, 5kPA / 31kN.
CONTRACTOR AND TANK OWNER TO ENSURE TANK POSITION DOES NOT EXPOSE THE TANK TO LOADS GREATER THAN SPECIFIED IN THESE DRAWINGS FOR THE DESIGN LIFE OF THE UNIT.

NOTE:
THIS SHEET IS FOR THE INSTALLATION OF TANKS ABOVE MAXIMUM POSSIBLE WATER TABLE LEVELS OR FOR INSTALLATIONS NOT REQUIRING ANCHOR PADS AS DETERMINED THROUGH "DEVAN PLASTICS stormVAULT UNDERGROUND CYLINDRICAL TANKS TOOLBOX VERSION 1.0 (OR HIGHER) CALCULATOR". IF TANKS ARE BEING INSTALLED ABOVE MAXIMUM POSSIBLE WATER TABLE LEVELS THEN SITE SPECIFIC REPORTS OR WATER TABLE INFORMATION MUST PROVE THE WATER LEVEL CAN NOT POSSIBLY RISE ABOVE THE BOTTOM OF THE EXCAVATION. IF THIS INFORMATION CAN NOT BE PROVIDED, REFER TO SHEET 059-003-S-203. IT IS THE RESPONSIBILITY OF THE CONTRACTOR AND OWNER TO ENSURE CORRECT TANK INSTALLATION IN ACCORDANCE WITH THE DEVAN INSTALLATION GUIDES AND DRAWINGS.

| REV | ISSUE | Date |
|---|---|---|
| 1 | FOR CONSTRUCTION | 16.04.25 |
| 0 | FOR CONSTRUCTION | 01.11.24 |

| | | |
|---|---|---|
| DESIGNED | SK | Contact SENZ when in doubt. Refer to Architectural Drawings for set out, do not scale Structural Engineering Drawings |
| CHECKED | SK/RR | Business Address: L1, 52 Highbrook Drive, East Tamaki, Auckland 2013 |
| DRAWN | AS | Phone Number: +64 9 275 6029<br>Evening Number: +64 9 889 9350<br>E-mail Address: info@structural-engs.co.nz<br>Website: www.structural-engs.co.nz |

SENZ Structural Engineers New Zealand

CLIENT DEVAN

PROJECT
**DEVAN PLASTICS STANDARD DESIGN FOR UNDERGROUND TANKS**

FOR CONSTRUCTION

SHEET TITLE
**RESIDENTIAL TRAFFIC LOADING WITHOUT ANCHORS - DOUBLE TANK INSTALLATION INSTRUCTIONS - SLAB ON CLASS M EXPANSIVE SOIL**

| SCALE | Drawing No. | REVISION |
|---|---|---|
| As indicated @ A3<br>1:A3x2 @ A1 | 059-003 -S-202 | 1 |

NOTE:
stormVAULT 800mm TANKS MAY BE DIRECTLY SUBSTITUTED WITH THE stormVAULT 1200mm TANKS, PROVIDED ALL DIMENSIONAL CONSTRAINTS IN THESE DRAWINGS ARE FOLLOWED.

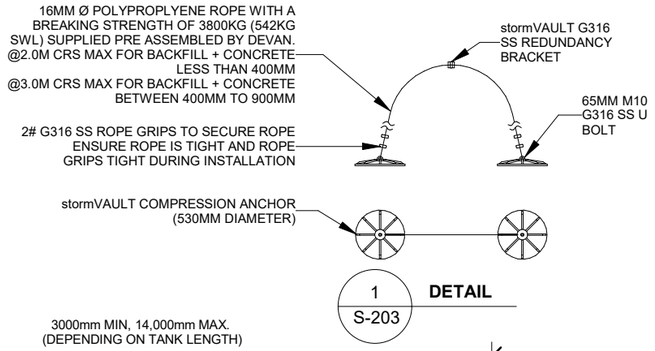


1 S-203 **DETAIL**

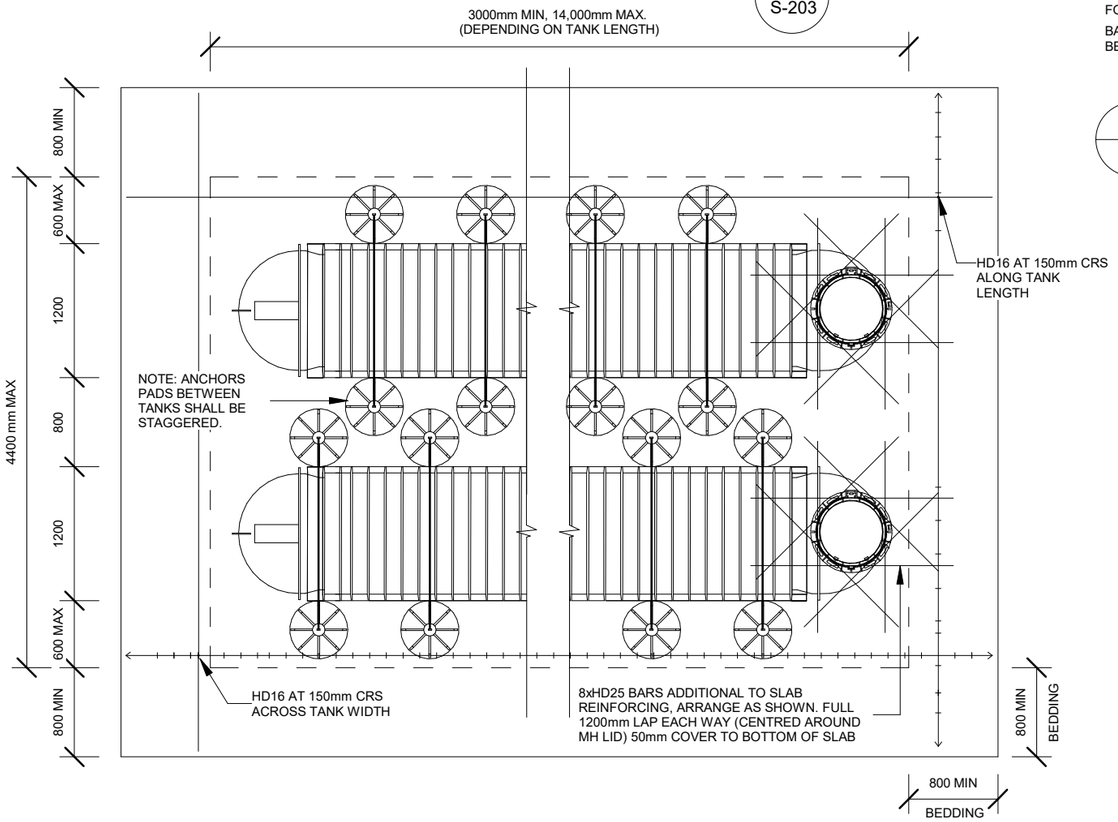


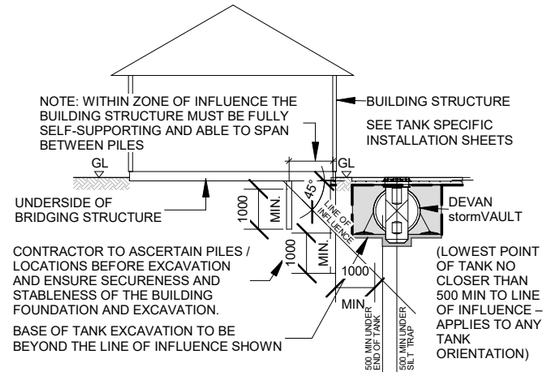


3 **TANK PLACEMENT NEAR PILED FOUNDATIONS**

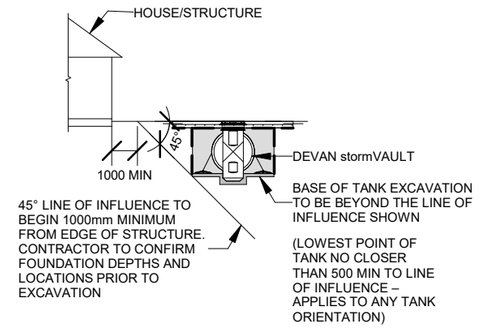


4 **TANK PLACEMENT NEAR BUILDING STRUCTURE**

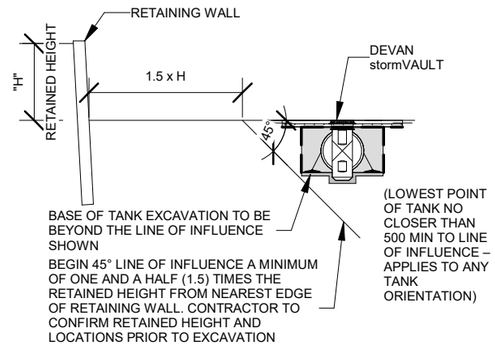


5 **TANK PLACEMENT NEAR RETAINING WALL**

IF DRIVEWAY IS EXISTING:
SCABBLE EDGE AND TIE WITH D12 DRILL AND EPOXY STARTERS AT 400mm CRS. 100mm MIN EMBEDMENT DEPTH INTO EXISTING SLAB, LAP 600mm INTO NEW TOPPING SLAB

IF DRIVEWAY IS NEW:
LAP TANK TOPPING STEEL WITH GENERAL DRIVEWAY REINFORCING. FULL LAP LENGTH REQUIRED (REFER TO SPECIFICATION SHEET)

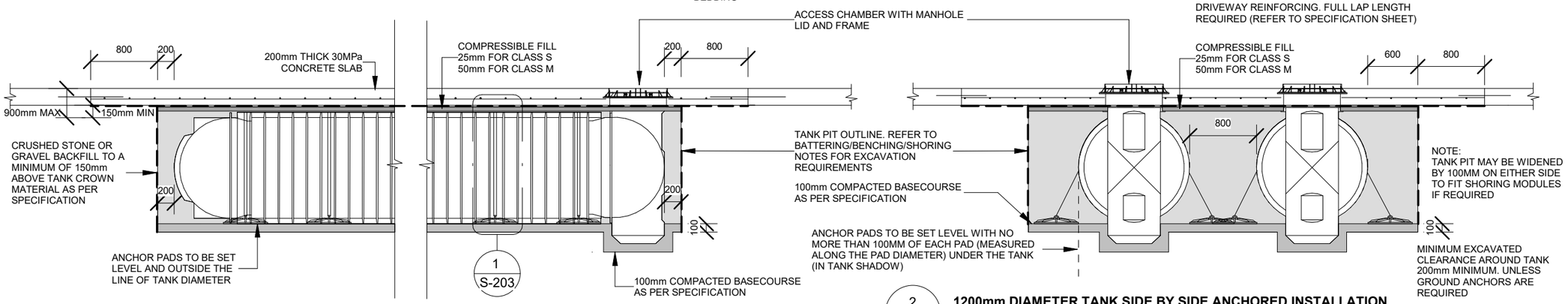


2 **1200mm DIAMETER TANK SIDE BY SIDE ANCHORED INSTALLATION**

NOTES:
- ALL DIMENSIONS IN MILLIMETRES UNO
- REFER TO STRUCTURAL SPECIFICATIONS SHEET OR CONCRETE REINFORCING & OTHER NOTES
- ALL LEVELS SHALL BE CONFIRMED BY THE CONTRACTOR PRIOR TO COMMENCEMENT OF WORK.
- ALL UNDERGROUND SERVICES SHALL BE CONFIRMED, LOCATED AND MARKED PRIOR TO ANY EXCAVATION WORKS,

- DEVAN PLASTICS LTD SHALL BE NOTIFIED IMMEDIATELY SHOULD ANY OF THE DESIGN PARAMETERS SHOWN ON THE DRAWINGS NOT BE ACHIEVABLE.

- REFER TO DEVAN PLASTICS LTD FOR MAXIMUM BURIAL DEPTH ALLOWANCES.

- TEMPORARY SUPPORT AND SHORING TO BE CARRIED OUT IN ACCORDANCE WITH WORKSAFE EXCAVATION SAFETY GUIDELINES.

- stormVAULT INSTALLATION TO BE CARRIED OUT IN CONJUCTION WITH DEVAN PRODUCT INFORMATION GUIDE AND THESE DRAWINGS

SOIL CONDITIONS
SITE SOIL CONDITIONS ALLOW FOR EXPANSIVE SOIL UP TO AND INCLUDING CLASS M AS DEFINED IN AS2870, PROVIDED AN ULTIMATE BEARING CAPACITY OF 300 KPA IS ACHIEVABLE FOR THE SUBGRADE DIRECTLY SUPPORTING THE SLAB AND THE BASECOURSE. NO ALLOWANCE FOR LIQUIFIABLE SOIL, OR SOIL WITH SLOPE STABILITY ISSUES. IT IS THE RESPONSIBILITY OF THE CONTRACTOR AND THE OWNER TO VERIFY THE SITE CONDITIONS PRIOR TO COMMENCING THE CONSTRUCTION WORKS.

TANK LOCATION - PROXIMITY TO NEARBY STRUCTURES:
IT IS THE CONTRACTOR AND OWNER'S RESPONSIBILITY TO ENSURE THAT THE LOCATION OF THE TANK WITH RESPECT TO ADJACENT STRUCTURES COMPLY WITH THE LIMITS AND RESTRICTIONS SET OUT IN THESE DRAWINGS. DEVAN PLASTICS LTD SHALL BE NOTIFIED IMMEDIATELY IF THOSE LIMITS ARE NOT ACHIEVABLE.

BACKFILL AND BASECOURSE:
GAP 10 or GAP 20 SHALL BE USED FOR BACKFILL AND BASECOURSE MATERIAL. ALTERNATIVE MATERIAL SHALL NOT BE USED WITHOUT THE WRITTEN APPROVAL OF DEVAN PLASTICS LTD.

CONTRACTOR SHALL BACKFILL LIFTS OF 150MM. THE CONTRACTOR SHALL USE THE APPROPRIATE TOOLS AND CONSTRUCTION TECHNIQUES TO ENSURE ALL VOIDS ARE FILLED ALONG THE FULL LENGTH OF THE TANK, ENSURING SUFFICIENT SUPPORT.

BATTERING/BENCHING/SHORING:
MANAGING THE STABILITY OF THE TRENCH DURING EXCAVATION IS THE RESPONSIBILITY OF THE CONTRACTOR, AND SHALL BE CARRIED OUT WITH THE RELEVANT GUIDELINES AND BEST PRACTICES IN ACCORDANCE WITH THE HEALTH AND SAFETY AT WORK ACT 2015. THIS INCLUDES, BUT NOT LIMITED TO, ANY EXCAVATIONS DEEPER THAN 1.5M. THE CONTRACTOR SHALL CONSULT WITH SUITABLE INDUSTRY PROFESIONALS SHOULD FURTHER GUIDANCE BE REQUIRED FOR BENCHING, BATTERING, AND SHORING.

LOADING:
VEHICLES UP TO 10,000kg "MEDIUM" TRAFFIC TABLE 3.1(g) NZS 1170.1, 5kPA / 31kN.
CONTRACTOR AND TANK OWNER TO ENSURE TANK POSITION DOES NOT EXPOSE THE TANK TO LOADS GREATER THAN SPECIFIED IN THESE DRAWINGS FOR THE DESIGN LIFE OF THE UNIT.

NOTE:
THIS SHEET IS FOR THE INSTALLATION OF TANKS REQUIRING ANCHOR PADS AS DETERMINED THROUGH "DEVAN PLASTICS stormVAULT UNDERGROUND CYLINDRICAL TANKS TOOLBOX VERSION 1.0 (OR HIGHER) CALCULATOR". IT IS THE RESPONSIBILITY OF THE CONTRACTOR AND OWNER TO ENSURE CORRECT TANK INSTALLATION IN ACCORDANCE WITH THE DEVAN INSTALLATION GUIDES AND DRAWINGS.

| REV | ISSUE | Date |
|---|---|---|
| 1 | FOR CONSTRUCTION | 16.04.25 |
| 0 | FOR CONSTRUCTION | 01.11.24 |

| | | |
|---|---|---|
| DESIGNED | SK | Contact SENZ when in doubt. Refer to Architectural Drawings for set out, do not scale Structural Engineering Drawings |
| CHECKED | SK/RR | Business Address: L1, 52 Highbrook Drive, East Tamaki, Auckland 2013 |
| DRAWN | AS | Phone Number: +64 9 275 6029<br>Evening Number: +64 9 889 9350<br>E-mail Address: info@structural-engs.co.nz<br>Website: www.structural-engs.co.nz |

SENZ Structural Engineers New Zealand

CLIENT DEVAN

PROJECT
**DEVAN PLASTICS STANDARD DESIGN FOR UNDERGROUND TANKS**

SHEET TITLE
**RESIDENTIAL TRAFFIC LOADING - DOUBLE TANK INSTALLATION INSTRUCTIONS WITH ANCHORS - SLAB ON CLASS M EXPANSIVE SOIL**

FOR CONSTRUCTION

| SCALE | Drawing No. | REVISION |
|---|---|---|
| As indicated @ A3<br>1:A3x2 @ A1 | 059-003 -S-203 | 1 |

NOTE:
stormVAULT 800mm TANKS MAY BE DIRECTLY SUBSTITUTED WITH THE stormVAULT 1200mm TANKS, PROVIDED ALL DIMENSIONAL CONSTRAINTS IN THESE DRAWINGS ARE FOLLOWED.

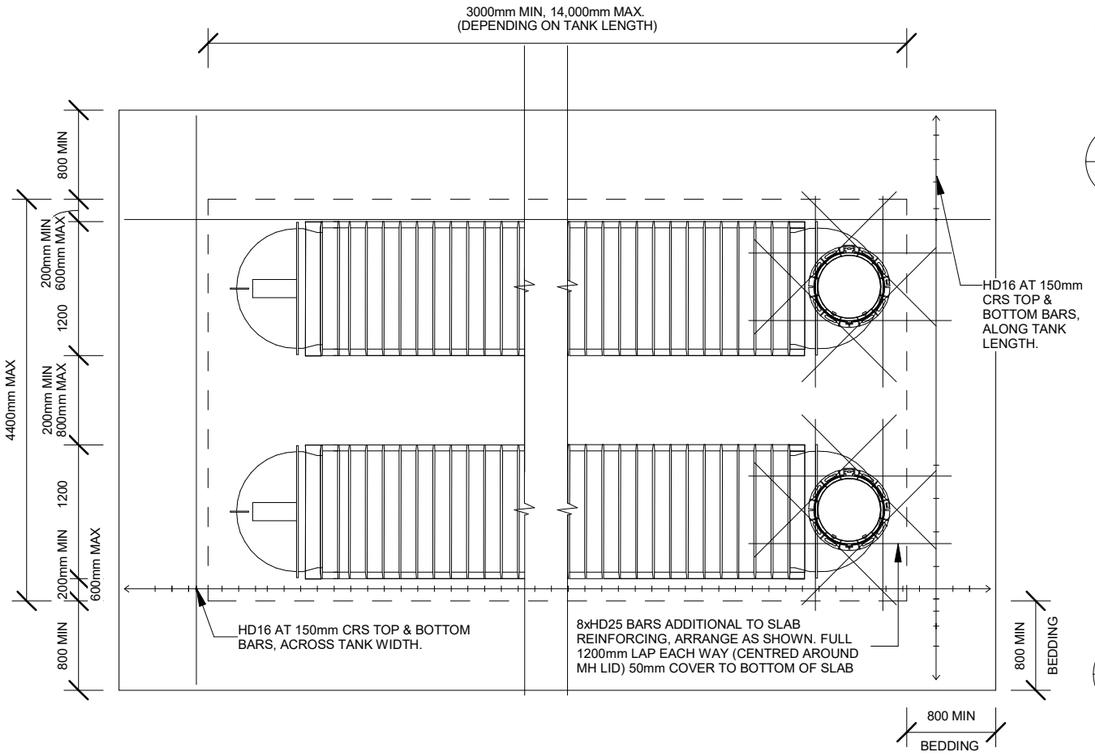


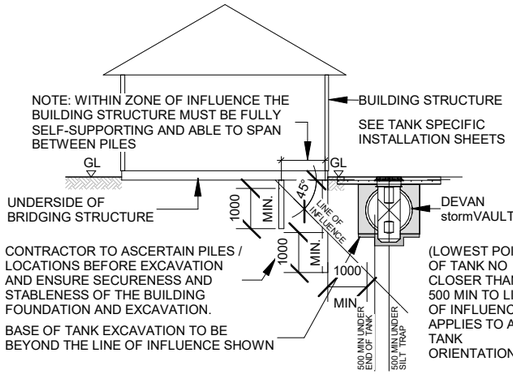


2 **TANK PLACEMENT NEAR PILED FOUNDATIONS**

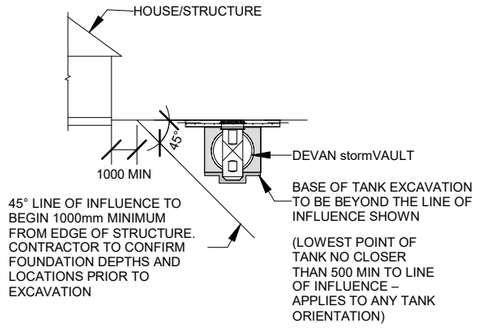


3 **TANK PLACEMENT NEAR BUILDING STRUCTURE**

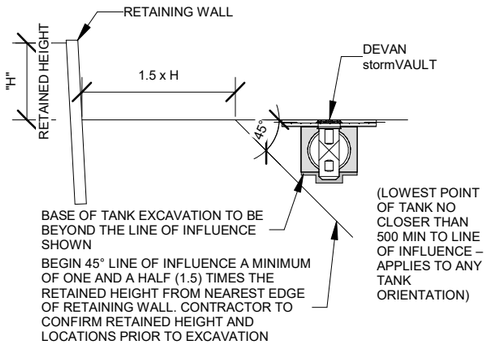


4 **TANK PLACEMENT NEAR RETAINING WALL**

IF DRIVEWAY IS EXISTING:
SCABBLE EDGE AND TIE WITH D12 DRILL AND EPOXY STARTERS AT 400mm CRS. 100mm MIN EMBEDMENT DEPTH INTO EXISTING SLAB, LAP 600mm INTO NEW TOPPING SLAB

IF DRIVEWAY IS NEW:
LAP TANK TOPPING STEEL WITH GENERAL DRIVEWAY REINFORCING. FULL LAP LENGTH REQUIRED (REFER TO SPECIFICATION SHEET)

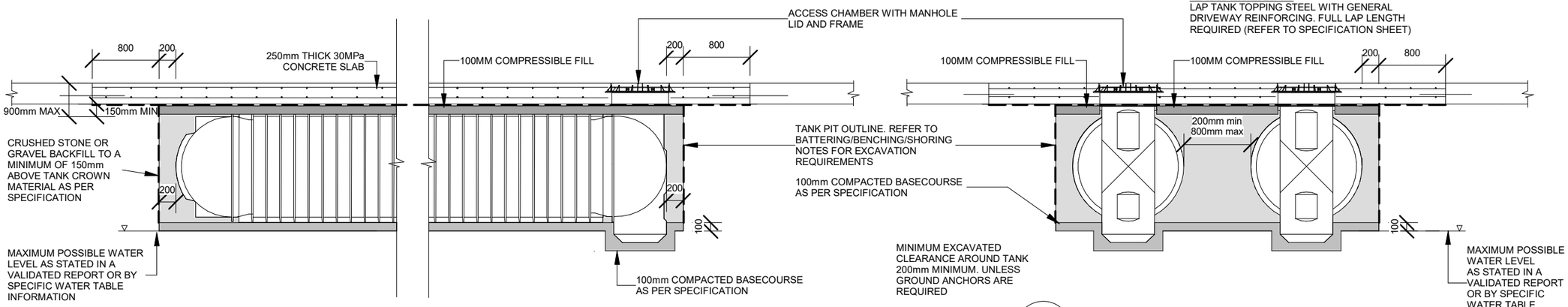


1 **1200mm DIAMETER TANK SIDE BY SIDE INSTALLATION**

NOTES:
- ALL DIMENSIONS IN MILLIMETRES UNO
- REFER TO STRUCTURAL SPECIFICATIONS SHEET OR CONCRETE REINFORCING & OTHER NOTES
- ALL LEVELS SHALL BE CONFIRMED BY THE CONTRACTOR PRIOR TO COMMENCEMENT OF WORK.
- ALL UNDERGROUND SERVICES SHALL BE CONFIRMED, LOCATED AND MARKED PRIOR TO ANY EXCAVATION WORKS,

- DEVAN PLASTICS LTD SHALL BE NOTIFIED IMMEDIATELY SHOULD ANY OF THE DESIGN PARAMETERS SHOWN ON THE DRAWINGS NOT BE ACHIEVABLE.

- REFER TO DEVAN PLASTICS LTD FOR MAXIMUM BURIAL DEPTH ALLOWANCES.

- TEMPORARY SUPPORT AND SHORING TO BE CARRIED OUT IN ACCORDANCE WITH WORKSAFE EXCAVATION SAFETY GUIDELINES.

- stormVAULT INSTALLATION TO BE CARRIED OUT IN CONJUCTION WITH DEVAN PRODUCT INFORMATION GUIDE AND THESE DRAWINGS

SOIL CONDITIONS
SITE SOIL CONDITIONS ALLOW FOR EXPANSIVE SOIL UP TO AND INCLUDING CLASS H2 AS DEFINED IN AS2870, PROVIDED AN ULTIMATE BEARING CAPACITY OF 300 KPA IS ACHIEVABLE FOR THE SUBGRADE DIRECTLY SUPPORTING THE SLAB AND THE BASECOURSE. NO ALLOWANCE FOR LIQUIFIABLE SOIL, OR SOIL WITH SLOPE STABILITY ISSUES. IT IS THE RESPONSIBILITY OF THE CONTRACTOR AND THE OWNER TO VERIFY THE SITE CONDITIONS PRIOR TO COMMENCING THE CONSTRUCTION WORKS.

TANK LOCATION - PROXIMITY TO NEARBY STRUCTURES:
IT IS THE CONTRACTOR AND OWNER'S RESPONSIBILITY TO ENSURE THAT THE LOCATION OF THE TANK WITH RESPECT TO ADJACENT STRUCTURES COMPLY WITH THE LIMITS AND RESTRICTIONS SET OUT IN THESE DRAWINGS. DEVAN PLASTICS LTD SHALL BE NOTIFIED IMMEDIATELY IF THOSE LIMITS ARE NOT ACHIEVABLE.

BACKFILL AND BASECOURSE:
GAP 10 or GAP 20 SHALL BE USED FOR BACKFILL AND BASECOURSE MATERIAL. ALTERNATIVE MATERIAL SHALL NOT BE USED WITHOUT THE WRITTEN APPROVAL OF DEVAN PLASTICS LTD.

CONTRACTOR SHALL BACKFILL LIFTS OF 150MM. THE CONTRACTOR SHALL USE THE APPROPRIATE TOOLS AND CONSTRUCTION TECHNIQUES TO ENSURE ALL VOIDS ARE FILLED ALONG THE FULL LENGTH OF THE TANK, ENSURING SUFFICIENT SUPPORT.

BATTERING/BENCHING/SHORING:
MANAGING THE STABILITY OF THE TRENCH DURING EXCAVATION IS THE RESPONSIBILITY OF THE CONTRACTOR, AND SHALL BE CARRIED OUT WITH THE RELEVANT GUIDELINES AND BEST PRACTICES IN ACCORDANCE WITH THE HEALTH AND SAFETY AT WORK ACT 2015. THIS INCLUDES, BUT NOT LIMITED TO, ANY EXCAVATIONS DEEPER THAN 1.5M. THE CONTRACTOR SHALL CONSULT WITH SUITABLE INDUSTRY PROFESIONALS SHOULD FURTHER GUIDANCE BE REQUIRED FOR BENCHING, BATTERING, AND SHORING.

LOADING:
VEHICLES UP TO 10,000kg "MEDIUM" TRAFFIC TABLE 3.1(g) NZS 1170.1, 5kPA / 31kN.
CONTRACTOR AND TANK OWNER TO ENSURE TANK POSITION DOES NOT EXPOSE THE TANK TO LOADS GREATER THAN SPECIFIED IN THESE DRAWINGS FOR THE DESIGN LIFE OF THE UNIT.

NOTE:
THIS SHEET IS FOR THE INSTALLATION OF TANKS ABOVE MAXIMUM POSSIBLE WATER TABLE LEVELS OR FOR INSTALLATIONS NOT REQUIRING ANCHOR PADS AS DETERMINED THROUGH "DEVAN PLASTICS stormVAULT UNDERGROUND CYLINDRICAL TANKS TOOLBOX VERSION 1.0 (OR HIGHER) CALCULATOR". IF TANKS ARE BEING INSTALLED ABOVE MAXIMUM POSSIBLE WATER TABLE LEVELS THEN SITE SPECIFIC REPORTS OR WATER TABLE INFORMATION MUST PROVE THE WATER LEVEL CAN NOT POSSIBLY RISE ABOVE THE BOTTOM OF THE EXCAVATION. IF THIS INFORMATION CAN NOT BE PROVIDED, REFER TO SHEET 059-003-S-205. IT IS THE RESPONSIBILITY OF THE CONTRACTOR AND OWNER TO ENSURE CORRECT TANK INSTALLATION IN ACCORDANCE WITH THE DEVAN INSTALLATION GUIDES AND DRAWINGS.

| REV | ISSUE | Date |
|---|---|---|
| 1 | FOR CONSTRUCTION | 16.04.25 |
| 0 | FOR CONSTRUCTION | 01.11.24 |

| | | |
|---|---|---|
| DESIGNED | SK | Contact SENZ when in doubt. Refer to Architectural Drawings for set out, do not scale Structural Engineering Drawings |
| CHECKED | SK/RR | Business Address: L1, 52 Highbrook Drive, East Tamaki, Auckland 2013 |
| DRAWN | AS | Phone Number: +64 9 275 6029<br>Evening Number: +64 9 889 9350<br>E-mail Address: info@structural-engs.co.nz<br>Website: www.structural-engs.co.nz |

SENZ Structural Engineers New Zealand

CLIENT DEVAN

PROJECT
**DEVAN PLASTICS STANDARD DESIGN FOR UNDERGROUND TANKS**

SHEET TITLE
**RESIDENTIAL TRAFFIC LOADING WITHOUT ANCHORS - DOUBLE TANK INSTALLATION INSTRUCTIONS - SLAB ON CLASS H2 EXPANSIVE SOIL**

FOR CONSTRUCTION

| SCALE | Drawing No. | REVISION |
|---|---|---|
| As indicated @ A3<br>1:A3x2 @ A1 | 059-003 -S-204 | 1 |

NOTE:
stormVAULT 800mm TANKS MAY BE DIRECTLY SUBSTITUTED WITH THE stormVAULT 1200mm TANKS, PROVIDED ALL DIMENSIONAL CONSTRAINTS IN THESE DRAWINGS ARE FOLLOWED.

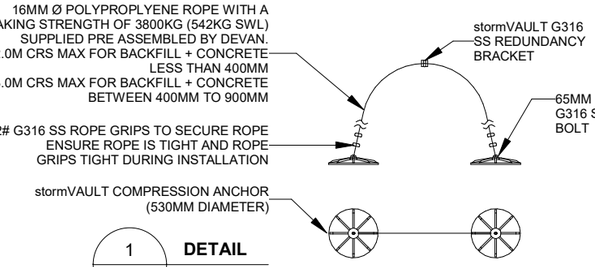


1 S-205 **DETAIL**

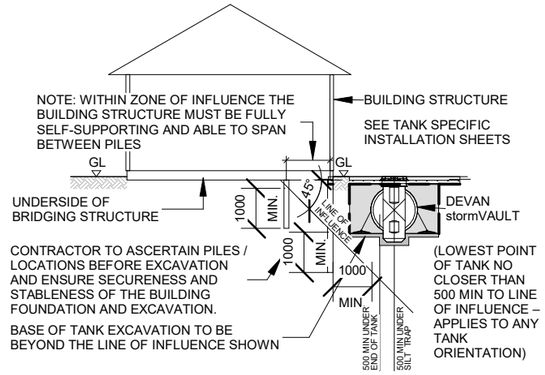


3 **TANK PLACEMENT NEAR PILED FOUNDATIONS**

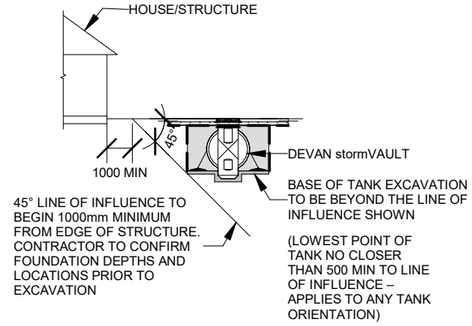


4 **TANK PLACEMENT NEAR BUILDING STRUCTURE**

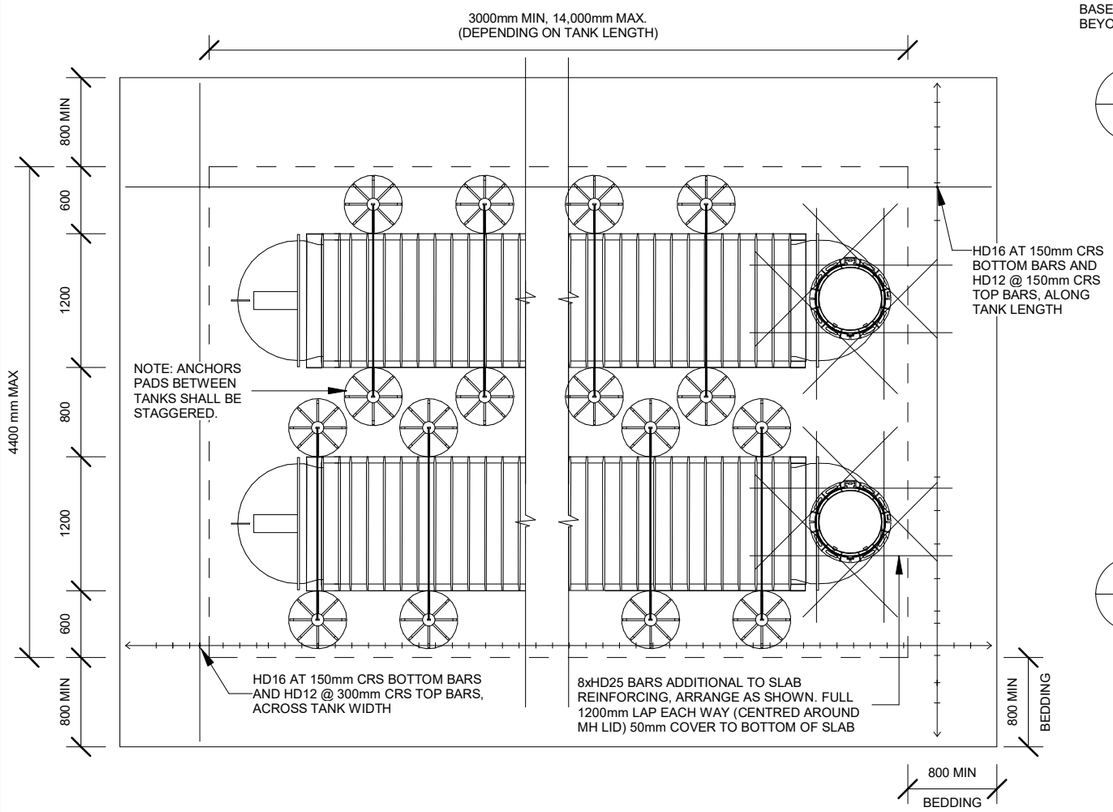


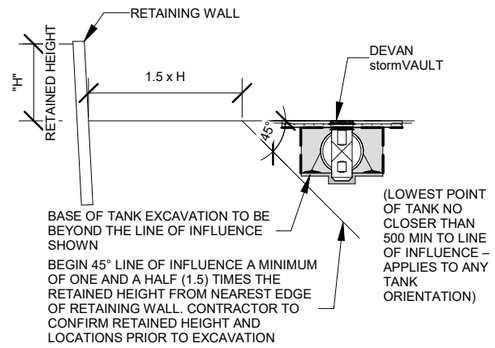


5 **TANK PLACEMENT NEAR RETAINING WALL**

IF DRIVEWAY IS EXISTING:
SCABBLE EDGE AND TIE WITH D12 DRILL AND EPOXY STARTERS AT 400mm CRS. 100mm MIN EMBEDMENT DEPTH INTO EXISTING SLAB, LAP 600mm INTO NEW TOPPING SLAB

IF DRIVEWAY IS NEW:
LAP TANK TOPPING STEEL WITH GENERAL DRIVEWAY REINFORCING. FULL LAP LENGTH REQUIRED (REFER TO SPECIFICATION SHEET)

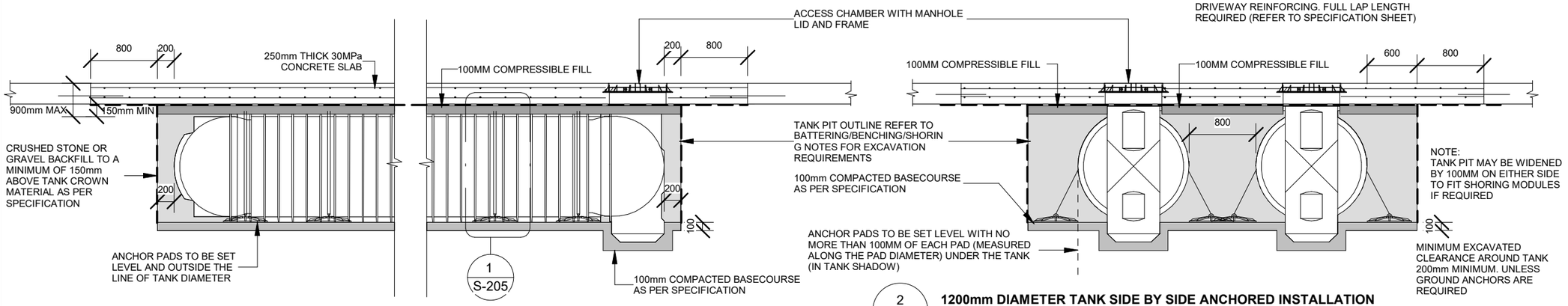


1 S-205

2 **1200mm DIAMETER TANK SIDE BY SIDE ANCHORED INSTALLATION**

NOTES:
- ALL DIMENSIONS IN MILLIMETRES UNO
- REFER TO STRUCTURAL SPECIFICATIONS SHEET OR CONCRETE REINFORCING & OTHER NOTES
- ALL LEVELS SHALL BE CONFIRMED BY THE CONTRACTOR PRIOR TO COMMENCEMENT OF WORK.
- ALL UNDERGROUND SERVICES SHALL BE CONFIRMED, LOCATED AND MARKED PRIOR TO ANY EXCAVATION WORKS,

- DEVAN PLASTICS LTD SHALL BE NOTIFIED IMMEDIATELY SHOULD ANY OF THE DESIGN PARAMETERS SHOWN ON THE DRAWINGS NOT BE ACHIEVABLE.

- REFER TO DEVAN PLASTICS LTD FOR MAXIMUM BURIAL DEPTH ALLOWANCES.

- TEMPORARY SUPPORT AND SHORING TO BE CARRIED OUT IN ACCORDANCE WITH WORKSAFE EXCAVATION SAFETY GUIDELINES.

- stormVAULT INSTALLATION TO BE CARRIED OUT IN CONJUCTION WITH DEVAN PRODUCT INFORMATION GUIDE AND THESE DRAWINGS

SOIL CONDITIONS
SITE SOIL CONDITIONS ALLOW FOR EXPANSIVE SOIL UP TO AND INCLUDING CLASS H2 AS DEFINED IN AS2870, PROVIDED AN ULTIMATE BEARING CAPACITY OF 300 KPA IS ACHIEVABLE FOR THE SUBGRADE DIRECTLY SUPPORTING THE SLAB AND THE BASECOURSE. NO ALLOWANCE FOR LIQUIFIABLE SOIL, OR SOIL WITH SLOPE STABILITY ISSUES. IT IS THE RESPONSIBILITY OF THE CONTRACTOR AND THE OWNER TO VERIFY THE SITE CONDITIONS PRIOR TO COMMENCING THE CONSTRUCTION WORKS.

TANK LOCATION - PROXIMITY TO NEARBY STRUCTURES:
IT IS THE CONTRACTOR AND OWNER'S RESPONSIBILITY TO ENSURE THAT THE LOCATION OF THE TANK WITH RESPECT TO ADJACENT STRUCTURES COMPLY WITH THE LIMITS AND RESTRICTIONS SET OUT IN THESE DRAWINGS. DEVAN PLASTICS LTD SHALL BE NOTIFIED IMMEDIATELY IF THOSE LIMITS ARE NOT ACHIEVABLE.

BACKFILL AND BASECOURSE:
GAP 10 or GAP 20 SHALL BE USED FOR BACKFILL AND BASECOURSE MATERIAL. ALTERNATIVE MATERIAL SHALL NOT BE USED WITHOUT THE WRITTEN APPROVAL OF DEVAN PLASTICS LTD.

CONTRACTOR SHALL BACKFILL LIFTS OF 150MM. THE CONTRACTOR SHALL USE THE APPROPRIATE TOOLS AND CONSTRUCTION TECHNIQUES TO ENSURE ALL VOIDS ARE FILLED ALONG THE FULL LENGTH OF THE TANK, ENSURING SUFFICIENT SUPPORT.

BATTERING/BENCHING/SHORING:
MANAGING THE STABILITY OF THE TRENCH DURING EXCAVATION IS THE RESPONSIBILITY OF THE CONTRACTOR, AND SHALL BE CARRIED OUT WITH THE RELEVANT GUIDELINES AND BEST PRACTICES IN ACCORDANCE WITH THE HEALTH AND SAFETY AT WORK ACT 2015. THIS INCLUDES, BUT NOT LIMITED TO, ANY EXCAVATIONS DEEPER THAN 1.5M. THE CONTRACTOR SHALL CONSULT WITH SUITABLE INDUSTRY PROFESIONALS SHOULD FURTHER GUIDANCE BE REQUIRED FOR BENCHING, BATTERING, AND SHORING.

LOADING:
VEHICLES UP TO 10,000kg "MEDIUM" TRAFFIC TABLE 3.1(g) NZS 1170.1, 5kPA / 31kN.
CONTRACTOR AND TANK OWNER TO ENSURE TANK POSITION DOES NOT EXPOSE THE TANK TO LOADS GREATER THAN SPECIFIED IN THESE DRAWINGS FOR THE DESIGN LIFE OF THE UNIT.

NOTE:
THIS SHEET IS FOR THE INSTALLATION OF TANKS REQUIRING ANCHOR PADS AS DETERMINED THROUGH "DEVAN PLASTICS stormVAULT UNDERGROUND CYLINDRICAL TANKS TOOLBOX VERSION 1.0 (OR HIGHER) CALCULATOR". IT IS THE RESPONSIBILITY OF THE CONTRACTOR AND OWNER TO ENSURE CORRECT TANK INSTALLATION IN ACCORDANCE WITH THE DEVAN INSTALLATION GUIDES AND DRAWINGS.

| REV | ISSUE | Date |
|---|---|---|
| 1 | FOR CONSTRUCTION | 16.04.25 |
| 0 | FOR CONSTRUCTION | 01.11.24 |

| | |
|---|---|
| DESIGNED | SK |
| CHECKED | SK/RR |
| DRAWN | AS |

Contact SENZ when in doubt. Refer to Architectural Drawings for set out, do not scale Structural Engineering Drawings


Business Address: L1, 52 Highbrook Drive, East Tamaki, Auckland 2013
Phone Number: +64 9 275 6029
Evening Number: +64 9 889 9350
E-mail Address: info@structural-engs.co.nz
Website: www.structural-engs.co.nz
SENZ Structural Engineers New Zealand


CLIENT
DEVAN

PROJECT
**DEVAN PLASTICS STANDARD DESIGN FOR UNDERGROUND TANKS**

FOR CONSTRUCTION

SHEET TITLE
**RESIDENTIAL TRAFFIC LOADING - DOUBLE TANK INSTALLATION INSTRUCTIONS WITH ANCHORS - SLAB ON CLASS H2 EXPANSIVE SOIL**

| SCALE | Drawing No. | REVISION |
|---|---|---|
| As indicated @ A3<br>1:A3x2 @ A1 | 059-003 -S-205 | 1 |

NOTE:
stormVAULT 800mm TANKS MAY BE DIRECTLY SUBSTITUTED WITH THE stormVAULT 1200mm TANKS, PROVIDED ALL DIMENSIONAL CONSTRAINTS IN THESE DRAWINGS ARE FOLLOWED.

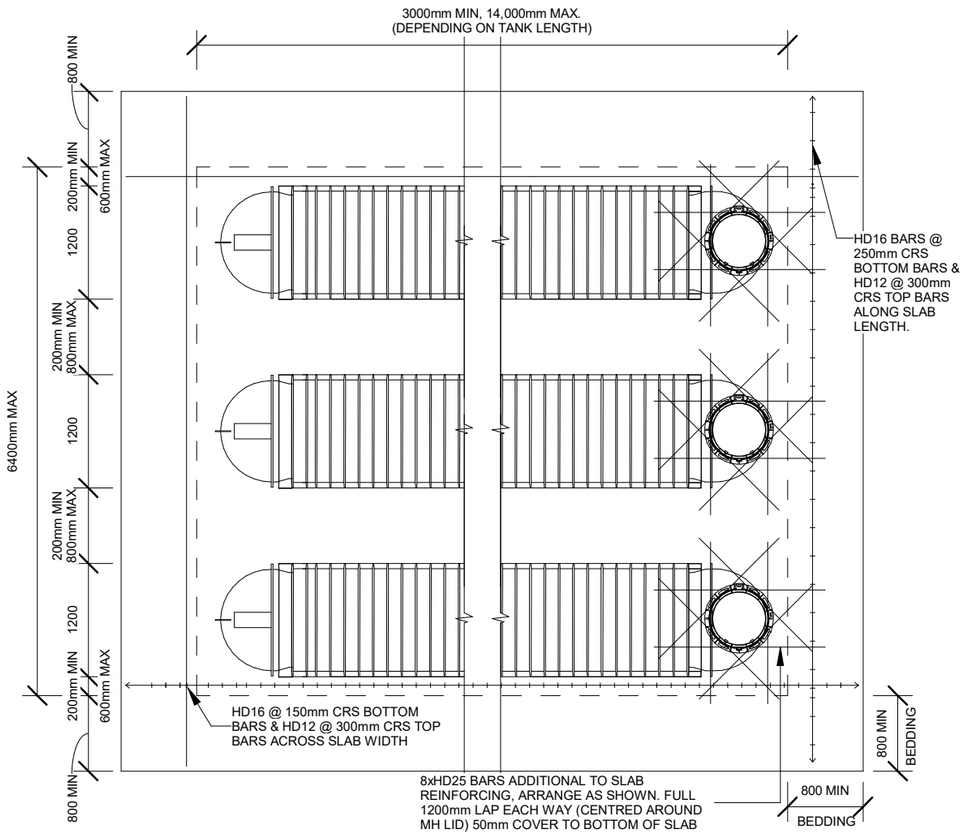


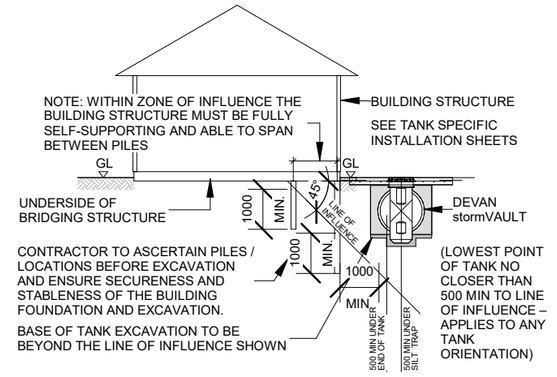


2 **TANK PLACEMENT NEAR PILED FOUNDATIONS**

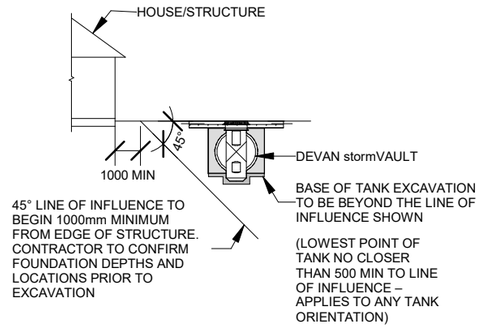


3 **TANK PLACEMENT NEAR BUILDING STRUCTURE**

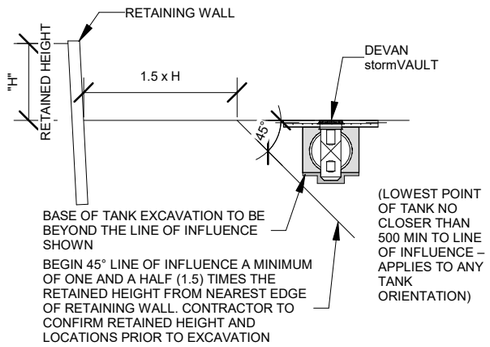


4 **TANK PLACEMENT NEAR RETAINING WALL**

IF DRIVEWAY IS EXISTING:
SCABBLE EDGE AND TIE WITH D12 DRILL AND EPOXY STARTERS AT 400mm CRS. 100mm MIN EMBEDMENT DEPTH INTO EXISTING SLAB, LAP 600mm INTO NEW TOPPING SLAB

IF DRIVEWAY IS NEW:
LAP TANK TOPPING STEEL WITH GENERAL DRIVEWAY REINFORCING. FULL LAP LENGTH REQUIRED (REFER TO SPECIFICATION SHEET)

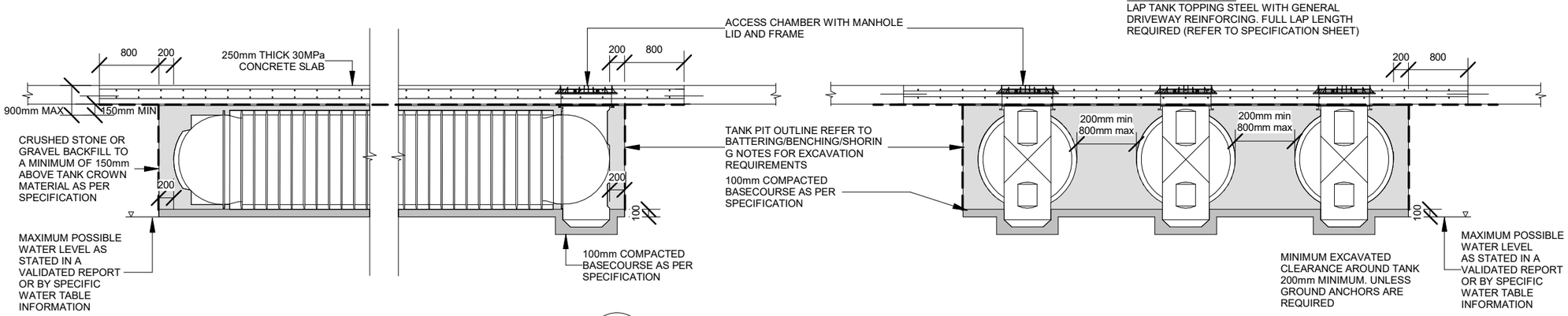


1 **1200mm DIAMETER TANK SIDE BY SIDE INSTALLATION**

NOTES:
- ALL DIMENSIONS IN MILLIMETRES UNO
- REFER TO STRUCTURAL SPECIFICATIONS SHEET OR CONCRETE REINFORCING & OTHER NOTES
- ALL LEVELS SHALL BE CONFIRMED BY THE CONTRACTOR PRIOR TO COMMENCEMENT OF WORK.
- ALL UNDERGROUND SERVICES SHALL BE CONFIRMED, LOCATED AND MARKED PRIOR TO ANY EXCAVATION WORKS,

- DEVAN PLASTICS LTD SHALL BE NOTIFIED IMMEDIATELY SHOULD ANY OF THE DESIGN PARAMETERS SHOWN ON THE DRAWINGS NOT BE ACHIEVABLE.

- REFER TO DEVAN PLASTICS LTD FOR MAXIMUM BURIAL DEPTH ALLOWANCES.

- TEMPORARY SUPPORT AND SHORING TO BE CARRIED OUT IN ACCORDANCE WITH WORKSAFE EXCAVATION SAFETY GUIDELINES.

- stormVAULT INSTALLATION TO BE CARRIED OUT IN CONJUCTION WITH DEVAN PRODUCT INFORMATION GUIDE AND THESE DRAWINGS

SOIL CONDITIONS
SITE SOIL CONDITIONS ARE CONSISTENT WITH "GOOD GROUND" AS DEFINED IN NZS3604:2011. i.e. NO ALLOWANCE FOR EXPANSIVE OR LIQUIFIABLE SOIL, OR SOIL WITH SLOPE STABILITY ISSUES. IT IS THE RESPONSIBILITY OF THE CONTRACTOR AND THE OWNER TO VERIFY THE SITE CONDITIONS PRIOR TO COMMENCING THE CONSTRUCTION WORKS.

TANK LOCATION - PROXIMITY TO NEARBY STRUCTURES:
IT IS THE CONTRACTOR AND OWNER'S RESPONSIBILITY TO ENSURE THAT THE LOCATION OF THE TANK WITH RESPECT TO ADJACENT STRUCTURES COMPLY WITH THE LIMITS AND RESTRICTIONS SET OUT IN THESE DRAWINGS. DEVAN PLASTICS LTD SHALL BE NOTIFIED IMMEDIATELY IF THOSE LIMITS ARE NOT ACHIEVABLE.

BACKFILL AND BASECOURSE:
GAP 10 or GAP 20 SHALL BE USED FOR BACKFILL AND BASECOURSE MATERIAL. ALTERNATIVE MATERIAL SHALL NOT BE USED WITHOUT THE WRITTEN APPROVAL OF DEVAN PLASTICS LTD.

CONTRACTOR SHALL BACKFILL LIFTS OF 150MM. THE CONTRACTOR SHALL USE THE APPROPRIATE TOOLS AND CONSTRUCTION TECHNIQUES TO ENSURE ALL VOIDS ARE FILLED ALONG THE FULL LENGTH OF THE TANK, ENSURING SUFFICIENT SUPPORT.

BATTERING/BENCHING/SHORING:
MANAGING THE STABILITY OF THE TRENCH DURING EXCAVATION IS THE RESPONSIBILITY OF THE CONTRACTOR, AND SHALL BE CARRIED OUT WITH THE RELEVANT GUIDELINES AND BEST PRACTICES IN ACCORDANCE WITH THE HEALTH AND SAFETY AT WORK ACT 2015. THIS INCLUDES, BUT NOT LIMITED TO, ANY EXCAVATIONS DEEPER THAN 1.5M. THE CONTRACTOR SHALL CONSULT WITH SUITABLE INDUSTRY PROFESIONALS SHOULD FURTHER GUIDANCE BE REQUIRED FOR BENCHING, BATTERING, AND SHORING.

LOADING:
VEHICLES UP TO 10,000kg "MEDIUM" TRAFFIC TABLE 3.1(g) NZS 1170.1, 5kPA / 31kN.
CONTRACTOR AND TANK OWNER TO ENSURE TANK POSITION DOES NOT EXPOSE THE TANK TO LOADS GREATER THAN SPECIFIED IN THESE DRAWINGS FOR THE DESIGN LIFE OF THE UNIT.

NOTE:
THIS SHEET IS FOR THE INSTALLATION OF TANKS ABOVE MAXIMUM POSSIBLE WATER TABLE LEVELS OR FOR INSTALLATIONS NOT REQUIRING ANCHOR PADS AS DETERMINED THROUGH "DEVAN PLASTICS stormVAULT UNDERGROUND CYLINDRICAL TANKS TOOLBOX VERSION 1.0 (OR HIGHER) CALCULATOR". IF TANKS ARE BEING INSTALLED ABOVE MAXIMUM POSSIBLE WATER TABLE LEVELS THEN SITE SPECIFIC REPORTS OR WATER TABLE INFORMATION MUST PROVE THE WATER LEVEL CAN NOT POSSIBLY RISE ABOVE THE BOTTOM OF THE EXCAVATION. IF THIS INFORMATION CAN NOT BE PROVIDED, REFER TO SHEET 059-003-S-301. IT IS THE RESPONSIBILITY OF THE CONTRACTOR AND OWNER TO ENSURE CORRECT TANK INSTALLATION IN ACCORDANCE WITH THE DEVAN INSTALLATION GUIDES AND DRAWINGS.

| REV | ISSUE | Date |
|---|---|---|
| 1 | FOR CONSTRUCTION | 16.04.25 |
| 0 | FOR CONSTRUCTION | 01.11.24 |

| | |
|---|---|
| DESIGNED | SK |
| CHECKED | SK/RR |
| DRAWN | AS |

Contact SENZ when in doubt. Refer to Architectural Drawings for set out, do not scale Structural Engineering Drawings


Business Address: L1, 52 Highbrook Drive, East Tamaki, Auckland 2013
Phone Number: +64 9 275 6029
Evening Number: +64 9 889 9350
E-mail Address: info@structural-engs.co.nz
Website: www.structural-engs.co.nz
SENZ Structural Engineers New Zealand


CLIENT
DEVAN

PROJECT
**DEVAN PLASTICS STANDARD DESIGN FOR UNDERGROUND TANKS**

SHEET TITLE
**RESIDENTIAL TRAFFIC LOADING WITHOUT ANCHORS-TRIPLE TANK INSTALLATION INSTRUCTIONS - SLAB ON GOOD GROUND**

FOR CONSTRUCTION

| SCALE | Drawing No. | REVISION |
|---|---|---|
| As indicated @ A3<br>1:A3x2 @ A1 | 059-003 -S-300 | 1 |

NOTE:
stormVAULT 800mm TANKS MAY BE DIRECTLY SUBSTITUTED WITH THE stormVAULT 1200mm TANKS, PROVIDED ALL DIMENSIONAL CONSTRAINTS IN THESE DRAWINGS ARE FOLLOWED.

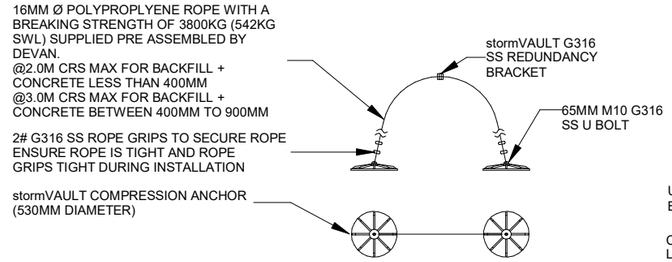


1 S-301 **DETAIL**

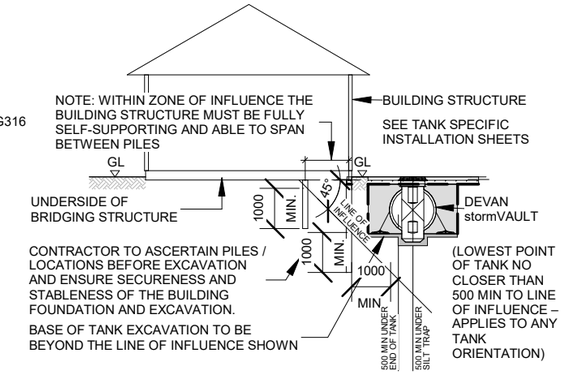


3 **TANK PLACEMENT NEAR PILED FOUNDATIONS**

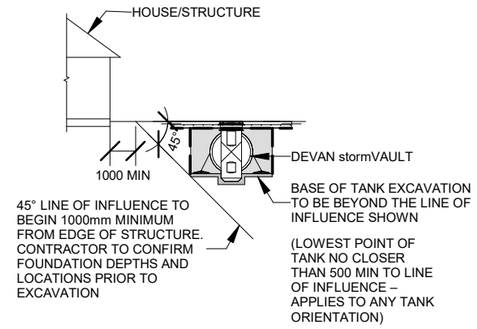


4 **TANK PLACEMENT NEAR BUILDING STRUCTURE**

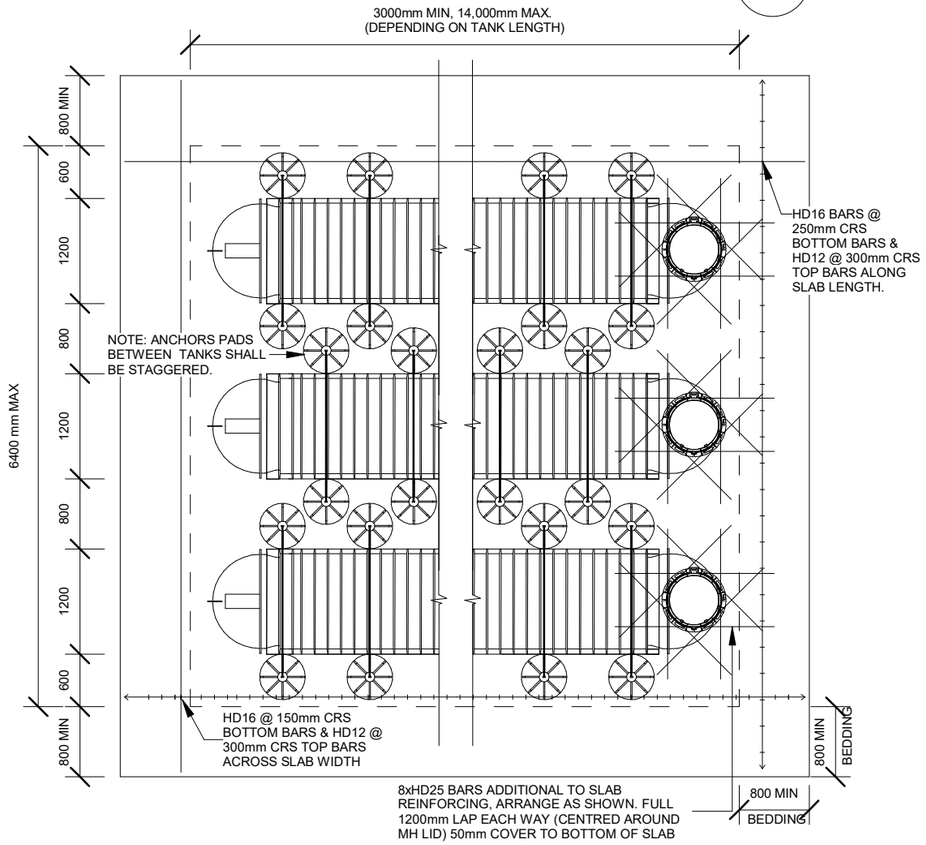


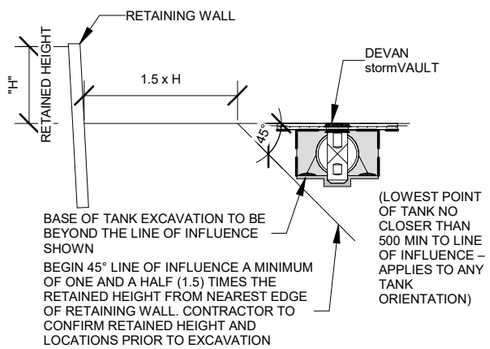


5 **TANK PLACEMENT NEAR RETAINING WALL**

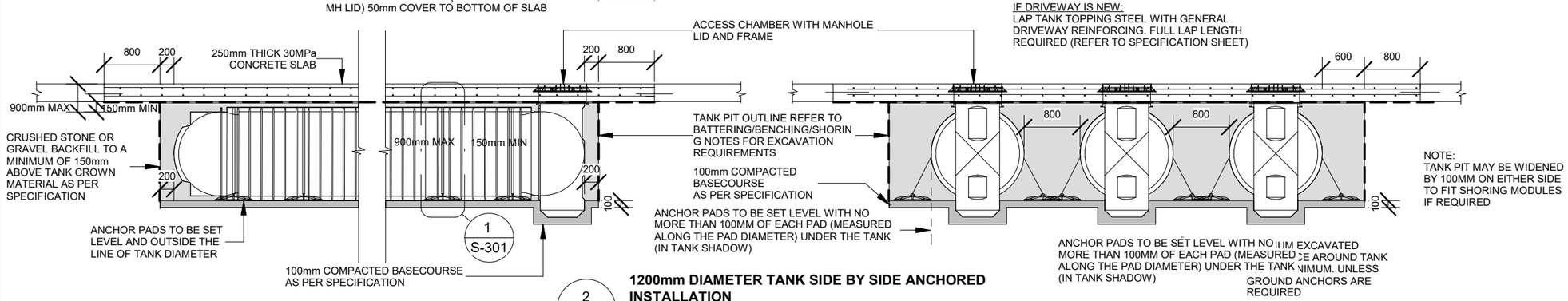


2 **1200mm DIAMETER TANK SIDE BY SIDE ANCHORED INSTALLATION**

NOTES:
- ALL DIMENSIONS IN MILLIMETRES UNO
- REFER TO STRUCTURAL SPECIFICATIONS SHEET OR CONCRETE REINFORCING & OTHER NOTES
- ALL LEVELS SHALL BE CONFIRMED BY THE CONTRACTOR PRIOR TO COMMENCEMENT OF WORK.
- ALL UNDERGROUND SERVICES SHALL BE CONFIRMED, LOCATED AND MARKED PRIOR TO ANY EXCAVATION WORKS,

- DEVAN PLASTICS LTD SHALL BE NOTIFIED IMMEDIATELY SHOULD ANY OF THE DESIGN PARAMETERS SHOWN ON THE DRAWINGS NOT BE ACHIEVABLE.

- REFER TO DEVAN PLASTICS LTD FOR MAXIMUM BURIAL DEPTH ALLOWANCES.

- TEMPORARY SUPPORT AND SHORING TO BE CARRIED OUT IN ACCORDANCE WITH WORKSAFE EXCAVATION SAFETY GUIDELINES.

- stormVAULT INSTALLATION TO BE CARRIED OUT IN CONJUCTION WITH DEVAN PRODUCT INFORMATION GUIDE AND THESE DRAWINGS

SOIL CONDITIONS
SITE SOIL CONDITIONS ARE CONSISTENT WITH "GOOD GROUND" AS DEFINED IN NZS3604:2011. i.e. NO ALLOWANCE FOR EXPANSIVE OR LIQUIFIABLE SOIL, OR SOIL WITH SLOPE STABILITY ISSUES. IT IS THE RESPONSIBILITY OF THE CONTRACTOR AND THE OWNER TO VERIFY THE SITE CONDITIONS PRIOR TO COMMENCING THE CONSTRUCTION WORKS.

TANK LOCATION - PROXIMITY TO NEARBY STRUCTURES:
IT IS THE CONTRACTOR AND OWNER'S RESPONSIBILITY TO ENSURE THAT THE LOCATION OF THE TANK WITH RESPECT TO ADJACENT STRUCTURES COMPLY WITH THE LIMITS AND RESTRICTIONS SET OUT IN THESE DRAWINGS. DEVAN PLASTICS LTD SHALL BE NOTIFIED IMMEDIATELY IF THOSE LIMITS ARE NOT ACHIEVABLE.

BACKFILL AND BASECOURSE:
GAP 10 or GAP 20 SHALL BE USED FOR BACKFILL AND BASECOURSE MATERIAL. ALTERNATIVE MATERIAL SHALL NOT BE USED WITHOUT THE WRITTEN APPROVAL OF DEVAN PLASTICS LTD.

CONTRACTOR SHALL BACKFILL LIFTS OF 150MM. THE CONTRACTOR SHALL USE THE APPROPRIATE TOOLS AND CONSTRUCTION TECHNIQUES TO ENSURE ALL VOIDS ARE FILLED ALONG THE FULL LENGTH OF THE TANK, ENSURING SUFFICIENT SUPPORT.

BATTERING/BENCHING/SHORING:
MANAGING THE STABILITY OF THE TRENCH DURING EXCAVATION IS THE RESPONSIBILITY OF THE CONTRACTOR, AND SHALL BE CARRIED OUT WITH THE RELEVANT GUIDELINES AND BEST PRACTICES IN ACCORDANCE WITH THE HEALTH AND SAFETY AT WORK ACT 2015. THIS INCLUDES, BUT NOT LIMITED TO, ANY EXCAVATIONS DEEPER THAN 1.5M. THE CONTRACTOR SHALL CONSULT WITH SUITABLE INDUSTRY PROFESIONALS SHOULD FURTHER GUIDANCE BE REQUIRED FOR BENCHING, BATTERING, AND SHORING.

LOADING:
VEHICLES UP TO 10,000kg "MEDIUM" TRAFFIC TABLE 3.1(g) NZS 1170.1, 5kPA / 31kN.
CONTRACTOR AND TANK OWNER TO ENSURE TANK POSITION DOES NOT EXPOSE THE TANK TO LOADS GREATER THAN SPECIFIED IN THESE DRAWINGS FOR THE DESIGN LIFE OF THE UNIT.

NOTE:
THIS SHEET IS FOR THE INSTALLATION OF TANKS REQUIRING ANCHOR PADS AS DETERMINED THROUGH "DEVAN PLASTICS stormVAULT UNDERGROUND CYLINDRICAL TANKS TOOLBOX VERSION 1.0 (OR HIGHER) CALCULATOR". IT IS THE RESPONSIBILITY OF THE CONTRACTOR AND OWNER TO ENSURE CORRECT TANK INSTALLATION IN ACCORDANCE WITH THE DEVAN INSTALLATION GUIDES AND DRAWINGS.

| REV | ISSUE | Date |
|---|---|---|
| 1 | FOR CONSTRUCTION | 16.04.25 |
| 0 | FOR CONSTRUCTION | 01.11.24 |

| | |
|---|---|
| DESIGNED | SK |
| CHECKED | SK/RR |
| DRAWN | AS |

Contact SENZ when in doubt. Refer to Architectural Drawings for set out, do not scale Structural Engineering Drawings


Business Address: L1, 52 Highbrook Drive, East Tamaki, Auckland 2013
Phone Number: +64 9 275 6029
Evening Number: +64 9 889 9350
E-mail Address: info@structural-engs.co.nz
Website: www.structural-engs.co.nz
SENZ Structural Engineers New Zealand


CLIENT
DEVAN

PROJECT
**DEVAN PLASTICS STANDARD DESIGN FOR UNDERGROUND TANKS**

FOR CONSTRUCTION

SHEET TITLE
**RESIDENTIAL TRAFFIC LOADING - TRIPLE TANK INSTALLATION INSTRUCTIONS WITH ANCHORS - SLAB ON GOOD GROUND**

| SCALE | Drawing No. | REVISION |
|---|---|---|
| As indicated @ A3<br>1:A3x2 @ A1 | 059-003 -S-301 | 1 |

NOTE:
stormVAULT 800mm TANKS MAY BE DIRECTLY SUBSTITUTED WITH THE stormVAULT 1200mm TANKS, PROVIDED ALL DIMENSIONAL CONSTRAINTS IN THESE DRAWINGS ARE FOLLOWED.

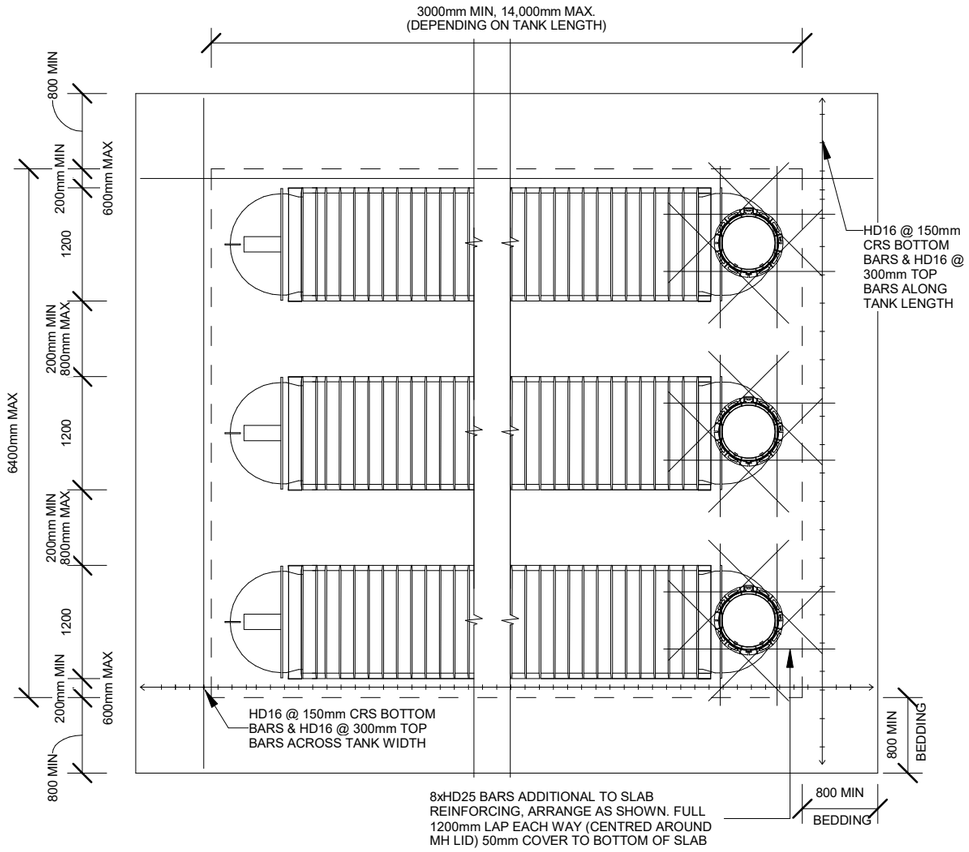


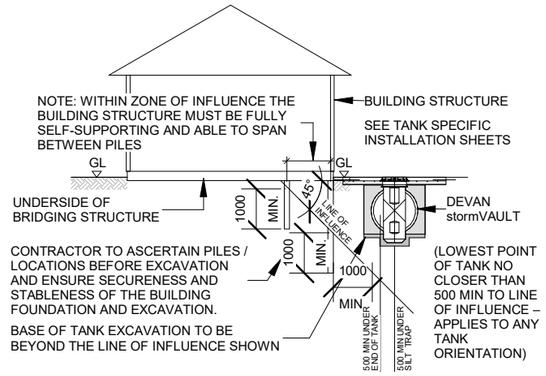


2 **TANK PLACEMENT NEAR PILED FOUNDATIONS**

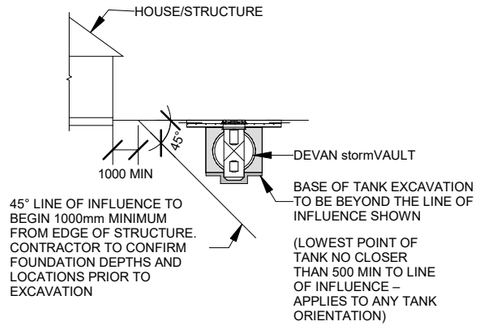


3 **TANK PLACEMENT NEAR BUILDING STRUCTURE**

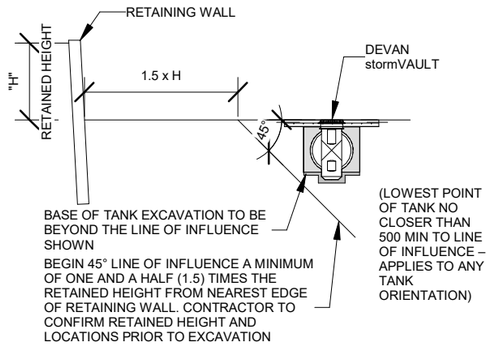


4 **TANK PLACEMENT NEAR RETAINING WALL**

IF DRIVEWAY IS EXISTING:
SCABBLE EDGE AND TIE WITH D12 DRILL AND EPOXY STARTERS AT 400mm CRS. 100mm MIN EMBEDMENT DEPTH INTO EXISTING SLAB, LAP 600mm INTO NEW TOPPING SLAB

IF DRIVEWAY IS NEW:
LAP TANK TOPPING STEEL WITH GENERAL DRIVEWAY REINFORCING. FULL LAP LENGTH REQUIRED (REFER TO SPECIFICATION SHEET)

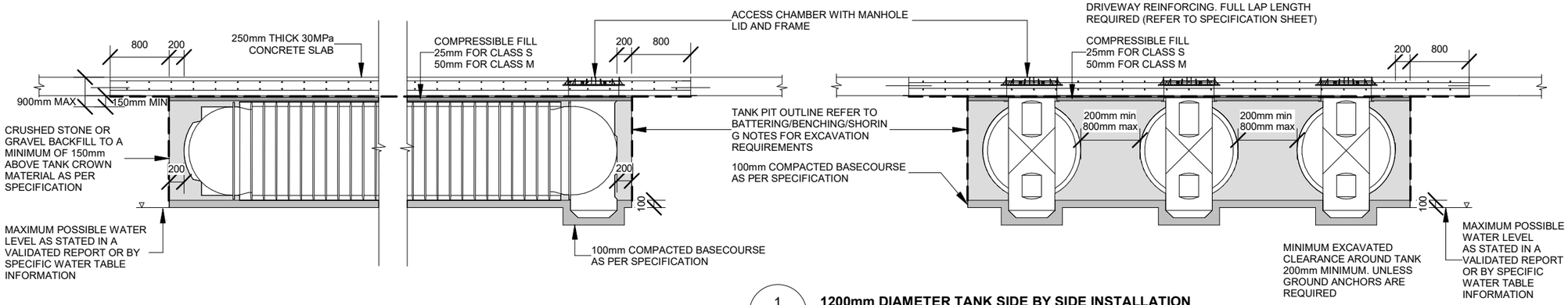


1 **1200mm DIAMETER TANK SIDE BY SIDE INSTALLATION**

NOTES:
- ALL DIMENSIONS IN MILLIMETRES UNO
- REFER TO STRUCTURAL SPECIFICATIONS SHEET OR CONCRETE REINFORCING & OTHER NOTES
- ALL LEVELS SHALL BE CONFIRMED BY THE CONTRACTOR PRIOR TO COMMENCEMENT OF WORK.
- ALL UNDERGROUND SERVICES SHALL BE CONFIRMED, LOCATED AND MARKED PRIOR TO ANY EXCAVATION WORKS,

- DEVAN PLASTICS LTD SHALL BE NOTIFIED IMMEDIATELY SHOULD ANY OF THE DESIGN PARAMETERS SHOWN ON THE DRAWINGS NOT BE ACHIEVABLE.

- REFER TO DEVAN PLASTICS LTD FOR MAXIMUM BURIAL DEPTH ALLOWANCES.

- TEMPORARY SUPPORT AND SHORING TO BE CARRIED OUT IN ACCORDANCE WITH WORKSAFE EXCAVATION SAFETY GUIDELINES.

- stormVAULT INSTALLATION TO BE CARRIED OUT IN CONJUCTION WITH DEVAN PRODUCT INFORMATION GUIDE AND THESE DRAWINGS

SOIL CONDITIONS
SITE SOIL CONDITIONS ALLOW FOR EXPANSIVE SOIL UP TO AND INCLUDING CLASS M AS DEFINED IN AS2870, PROVIDED AN ULTIMATE BEARING CAPACITY OF 300 KPA IS ACHIEVABLE FOR THE SUBGRADE DIRECTLY SUPPORTING THE SLAB AND THE BASECOURSE. NO ALLOWANCE FOR LIQUIFIABLE SOIL, OR SOIL WITH SLOPE STABILITY ISSUES. IT IS THE RESPONSIBILITY OF THE CONTRACTOR AND THE OWNER TO VERIFY THE SITE CONDITIONS PRIOR TO COMMENCING THE CONSTRUCTION WORKS.

TANK LOCATION - PROXIMITY TO NEARBY STRUCTURES:
IT IS THE CONTRACTOR AND OWNER'S RESPONSIBILITY TO ENSURE THAT THE LOCATION OF THE TANK WITH RESPECT TO ADJACENT STRUCTURES COMPLY WITH THE LIMITS AND RESTRICTIONS SET OUT IN THESE DRAWINGS. DEVAN PLASTICS LTD SHALL BE NOTIFIED IMMEDIATELY IF THOSE LIMITS ARE NOT ACHIEVABLE.

BACKFILL AND BASECOURSE:
GAP 10 or GAP 20 SHALL BE USED FOR BACKFILL AND BASECOURSE MATERIAL. ALTERNATIVE MATERIAL SHALL NOT BE USED WITHOUT THE WRITTEN APPROVAL OF DEVAN PLASTICS LTD.

CONTRACTOR SHALL BACKFILL LIFTS OF 150MM. THE CONTRACTOR SHALL USE THE APPROPRIATE TOOLS AND CONSTRUCTION TECHNIQUES TO ENSURE ALL VOIDS ARE FILLED ALONG THE FULL LENGTH OF THE TANK, ENSURING SUFFICIENT SUPPORT.

BATTERING/BENCHING/SHORING:
MANAGING THE STABILITY OF THE TRENCH DURING EXCAVATION IS THE RESPONSIBILITY OF THE CONTRACTOR, AND SHALL BE CARRIED OUT WITH THE RELEVANT GUIDELINES AND BEST PRACTICES IN ACCORDANCE WITH THE HEALTH AND SAFETY AT WORK ACT 2015. THIS INCLUDES, BUT NOT LIMITED TO, ANY EXCAVATIONS DEEPER THAN 1.5M. THE CONTRACTOR SHALL CONSULT WITH SUITABLE INDUSTRY PROFESIONALS SHOULD FURTHER GUIDANCE BE REQUIRED FOR BENCHING, BATTERING, AND SHORING.

LOADING:
VEHICLES UP TO 10,000kg "MEDIUM" TRAFFIC TABLE 3.1(g) NZS 1170.1, 5kPA / 31kN.
CONTRACTOR AND TANK OWNER TO ENSURE TANK POSITION DOES NOT EXPOSE THE TANK TO LOADS GREATER THAN SPECIFIED IN THESE DRAWINGS FOR THE DESIGN LIFE OF THE UNIT.

NOTE:
THIS SHEET IS FOR THE INSTALLATION OF TANKS ABOVE MAXIMUM POSSIBLE WATER TABLE LEVELS OR FOR INSTALLATIONS NOT REQUIRING ANCHOR PADS AS DETERMINED THROUGH "DEVAN PLASTICS stormVAULT UNDERGROUND CYLINDRICAL TANKS TOOLBOX VERSION 1.0 (OR HIGHER) CALCULATOR". IF TANKS ARE BEING INSTALLED ABOVE MAXIMUM POSSIBLE WATER TABLE LEVELS THEN SITE SPECIFIC REPORTS OR WATER TABLE INFORMATION MUST PROVE THE WATER LEVEL CAN NOT POSSIBLY RISE ABOVE THE BOTTOM OF THE EXCAVATION. IF THIS INFORMATION CAN NOT BE PROVIDED, REFER TO SHEET 059-003-S-303. IT IS THE RESPONSIBILITY OF THE CONTRACTOR AND OWNER TO ENSURE CORRECT TANK INSTALLATION IN ACCORDANCE WITH THE DEVAN INSTALLATION GUIDES AND DRAWINGS.

| REV | ISSUE | Date |
|---|---|---|
| 1 | FOR CONSTRUCTION | 16.04.25 |
| 0 | FOR CONSTRUCTION | 01.11.24 |

| | | |
|---|---|---|
| DESIGNED | SK | Contact SENZ when in doubt. Refer to Architectural Drawings for set out, do not scale Structural Engineering Drawings |
| CHECKED | SK/RR | Business Address: L1, 52 Highbrook Drive, East Tamaki, Auckland 2013 |
| DRAWN | AS | Phone Number: +64 9 275 6029<br>Evening Number: +64 9 889 9350<br>E-mail Address: info@structural-engs.co.nz<br>Website: www.structural-engs.co.nz |

SENZ Structural Engineers New Zealand

CLIENT DEVAN

PROJECT
**DEVAN PLASTICS STANDARD DESIGN FOR UNDERGROUND TANKS**

FOR CONSTRUCTION

SHEET TITLE
**RESIDENTIAL TRAFFIC LOADING WITHOUT ANCHORS - TRIPLE TANK INSTALLATION INSTRUCTIONS - SLAB ON CLASS M EXPANSIVE SOIL**

| SCALE | Drawing No. | REVISION |
|---|---|---|
| As indicated @ A3<br>1:A3x2 @ A1 | 059-003 -S-302 | 1 |

NOTE:
stormVAULT 800mm TANKS MAY BE DIRECTLY SUBSTITUTED WITH THE stormVAULT 1200mm TANKS, PROVIDED ALL DIMENSIONAL CONSTRAINTS IN THESE DRAWINGS ARE FOLLOWED.

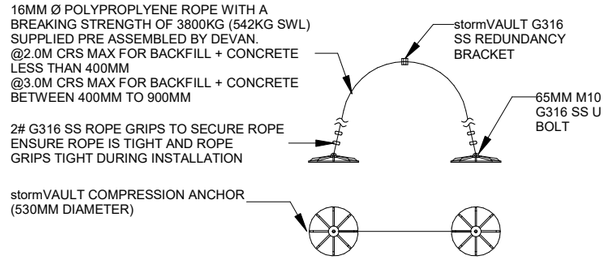


1 S-303 **DETAIL**

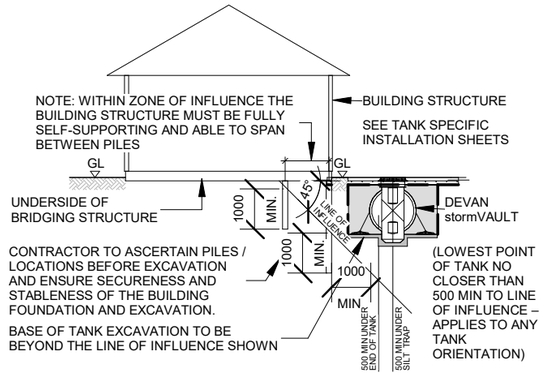


3 **TANK PLACEMENT NEAR PILED FOUNDATIONS**

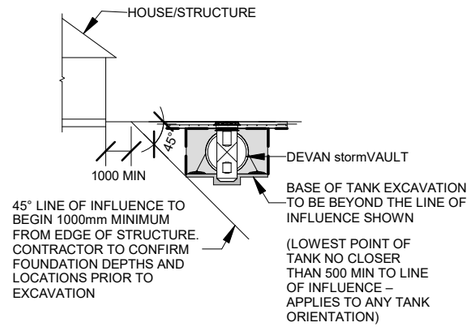


4 **TANK PLACEMENT NEAR BUILDING STRUCTURE**

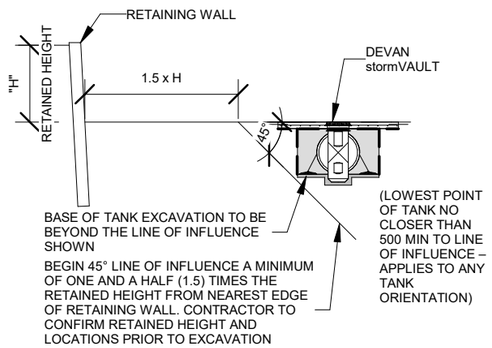


5 **TANK PLACEMENT NEAR RETAINING WALL**

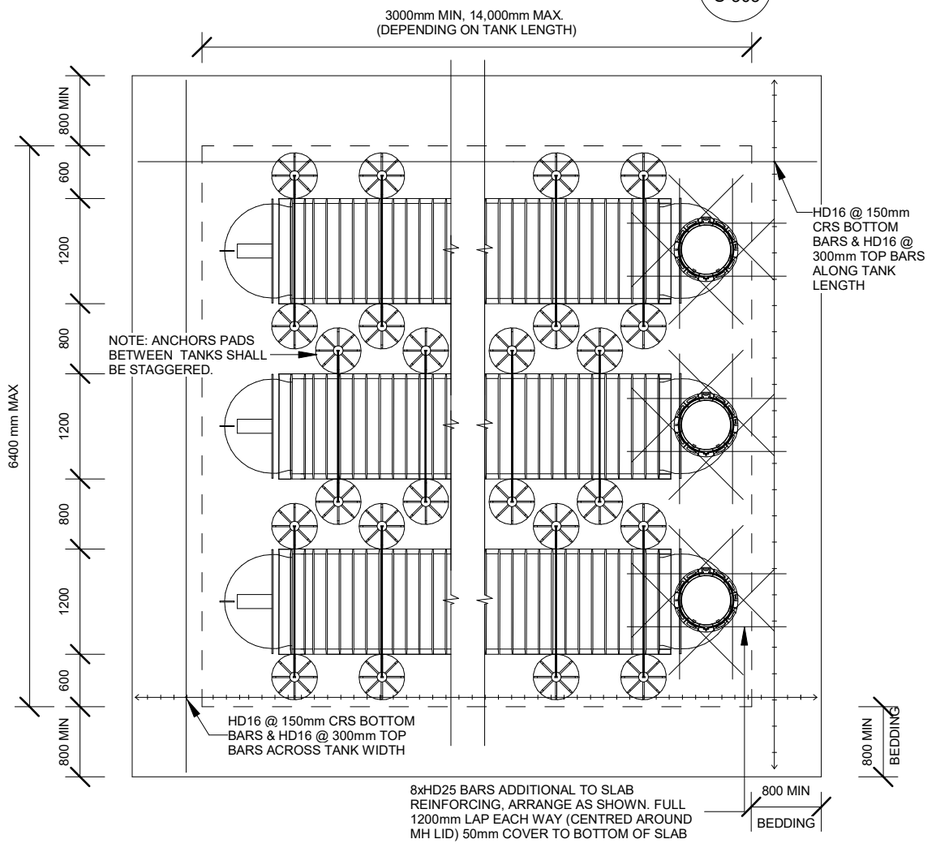


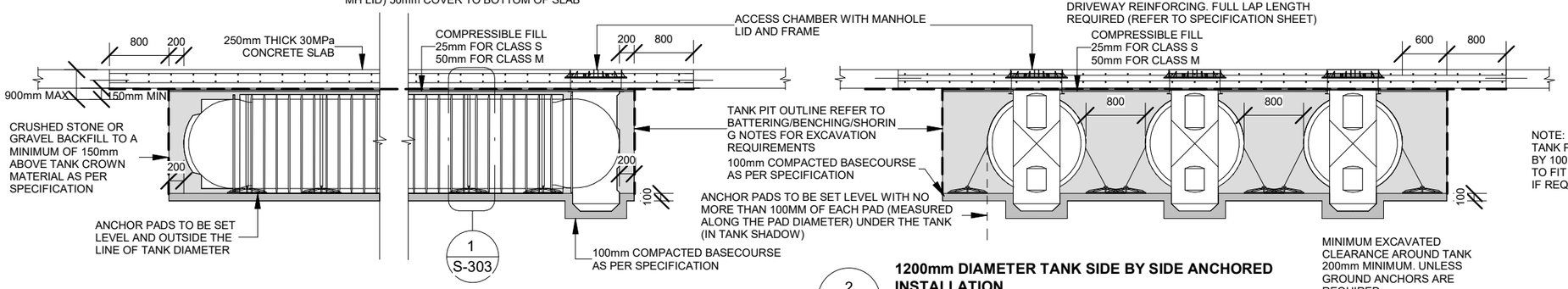


IF DRIVEWAY IS EXISTING:
SCABBLE EDGE AND TIE WITH D12 DRILL AND EPOXY STARTERS AT 400mm CRS. 100mm MIN EMBEDMENT DEPTH INTO EXISTING SLAB, LAP 600mm INTO NEW TOPPING SLAB

IF DRIVEWAY IS NEW:
LAP TANK TOPPING STEEL WITH GENERAL DRIVEWAY REINFORCING. FULL LAP LENGTH REQUIRED (REFER TO SPECIFICATION SHEET)

2 **1200mm DIAMETER TANK SIDE BY SIDE ANCHORED INSTALLATION**

NOTES:
- ALL DIMENSIONS IN MILLIMETRES UNO
- REFER TO STRUCTURAL SPECIFICATIONS SHEET OR CONCRETE REINFORCING & OTHER NOTES
- ALL LEVELS SHALL BE CONFIRMED BY THE CONTRACTOR PRIOR TO COMMENCEMENT OF WORK.
- ALL UNDERGROUND SERVICES SHALL BE CONFIRMED, LOCATED AND MARKED PRIOR TO ANY EXCAVATION WORKS,

- DEVAN PLASTICS LTD SHALL BE NOTIFIED IMMEDIATELY SHOULD ANY OF THE DESIGN PARAMETERS SHOWN ON THE DRAWINGS NOT BE ACHIEVABLE.

- REFER TO DEVAN PLASTICS LTD FOR MAXIMUM BURIAL DEPTH ALLOWANCES.

- TEMPORARY SUPPORT AND SHORING TO BE CARRIED OUT IN ACCORDANCE WITH WORKSAFE EXCAVATION SAFETY GUIDELINES.

- stormVAULT INSTALLATION TO BE CARRIED OUT IN CONJUCTION WITH DEVAN PRODUCT INFORMATION GUIDE AND THESE DRAWINGS

SOIL CONDITIONS
SITE SOIL CONDITIONS ALLOW FOR EXPANSIVE SOIL UP TO AND INCLUDING CLASS M AS DEFINED IN AS2870, PROVIDED AN ULTIMATE BEARING CAPACITY OF 300 KPA IS ACHIEVABLE FOR THE SUBGRADE DIRECTLY SUPPORTING THE SLAB AND THE BASECOURSE. NO ALLOWANCE FOR LIQUIFIABLE SOIL, OR SOIL WITH SLOPE STABILITY ISSUES. IT IS THE RESPONSIBILITY OF THE CONTRACTOR AND THE OWNER TO VERIFY THE SITE CONDITIONS PRIOR TO COMMENCING THE CONSTRUCTION WORKS.

TANK LOCATION - PROXIMITY TO NEARBY STRUCTURES:
IT IS THE CONTRACTOR AND OWNER'S RESPONSIBILITY TO ENSURE THAT THE LOCATION OF THE TANK WITH RESPECT TO ADJACENT STRUCTURES COMPLY WITH THE LIMITS AND RESTRICTIONS SET OUT IN THESE DRAWINGS. DEVAN PLASTICS LTD SHALL BE NOTIFIED IMMEDIATELY IF THOSE LIMITS ARE NOT ACHIEVABLE.

BACKFILL AND BASECOURSE:
GAP 10 or GAP 20 SHALL BE USED FOR BACKFILL AND BASECOURSE MATERIAL. ALTERNATIVE MATERIAL SHALL NOT BE USED WITHOUT THE WRITTEN APPROVAL OF DEVAN PLASTICS LTD.

CONTRACTOR SHALL BACKFILL LIFTS OF 150MM. THE CONTRACTOR SHALL USE THE APPROPRIATE TOOLS AND CONSTRUCTION TECHNIQUES TO ENSURE ALL VOIDS ARE FILLED ALONG THE FULL LENGTH OF THE TANK, ENSURING SUFFICIENT SUPPORT.

BATTERING/BENCHING/SHORING:
MANAGING THE STABILITY OF THE TRENCH DURING EXCAVATION IS THE RESPONSIBILITY OF THE CONTRACTOR, AND SHALL BE CARRIED OUT WITH THE RELEVANT GUIDELINES AND BEST PRACTICES IN ACCORDANCE WITH THE HEALTH AND SAFETY AT WORK ACT 2015. THIS INCLUDES, BUT NOT LIMITED TO, ANY EXCAVATIONS DEEPER THAN 1.5M. THE CONTRACTOR SHALL CONSULT WITH SUITABLE INDUSTRY PROFESIONALS SHOULD FURTHER GUIDANCE BE REQUIRED FOR BENCHING, BATTERING, AND SHORING.

LOADING:
VEHICLES UP TO 10,000kg "MEDIUM" TRAFFIC TABLE 3.1(g) NZS 1170.1, 5kPA / 31kN.
CONTRACTOR AND TANK OWNER TO ENSURE TANK POSITION DOES NOT EXPOSE THE TANK TO LOADS GREATER THAN SPECIFIED IN THESE DRAWINGS FOR THE DESIGN LIFE OF THE UNIT.

NOTE:
THIS SHEET IS FOR THE INSTALLATION OF TANKS REQUIRING ANCHOR PADS AS DETERMINED THROUGH "DEVAN PLASTICS stormVAULT UNDERGROUND CYLINDRICAL TANKS TOOLBOX VERSION 1.0 (OR HIGHER) CALCULATOR". IT IS THE RESPONSIBILITY OF THE CONTRACTOR AND OWNER TO ENSURE CORRECT TANK INSTALLATION IN ACCORDANCE WITH THE DEVAN INSTALLATION GUIDES AND DRAWINGS.

| REV | ISSUE | Date |
|---|---|---|
| 1 | FOR CONSTRUCTION | 16.04.25 |
| 0 | FOR CONSTRUCTION | 01.11.24 |

| | | |
|---|---|---|
| DESIGNED | SK | Contact SENZ when in doubt. Refer to Architectural Drawings for set out, do not scale Structural Engineering Drawings |
| CHECKED | SK/RR | Business Address: L1, 52 Highbrook Drive, East Tamaki, Auckland 2013 |
| DRAWN | AS | Phone Number: +64 9 275 6029<br>Evening Number: +64 9 889 9350<br>E-mail Address: info@structural-engs.co.nz<br>Website: www.structural-engs.co.nz |

SENZ Structural Engineers New Zealand

CLIENT DEVAN

PROJECT
**DEVAN PLASTICS STANDARD DESIGN FOR UNDERGROUND TANKS**

FOR CONSTRUCTION

SHEET TITLE
**RESIDENTIAL TRAFFIC LOADING - TRIPLE TANK INSTALLATION INSTRUCTIONS WITH ANCHORS - SLAB ON CLASS M EXPANSIVE SOIL**

| SCALE | Drawing No. | REVISION |
|---|---|---|
| As indicated @ A3<br>1:A3x2 @ A1 | 059-003 -S-303 | 1 |

NOTE:
stormVAULT 800mm TANKS MAY BE DIRECTLY SUBSTITUTED WITH THE stormVAULT 1200mm TANKS, PROVIDED ALL DIMENSIONAL CONSTRAINTS IN THESE DRAWINGS ARE FOLLOWED.

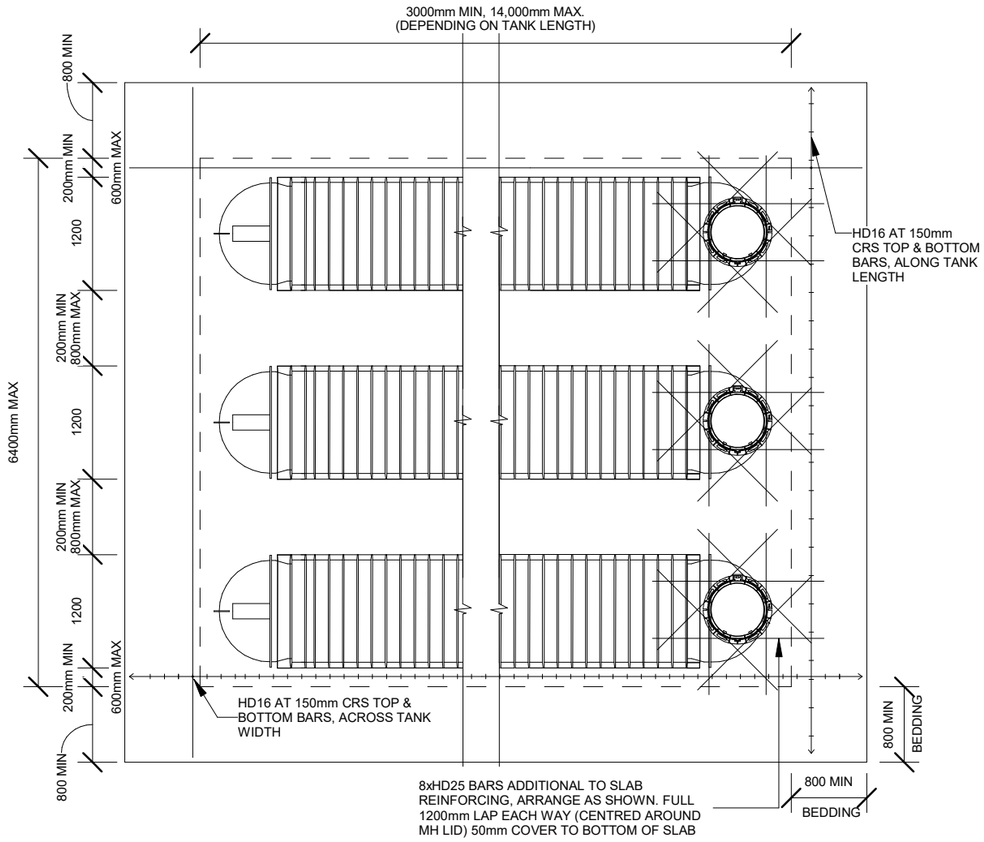


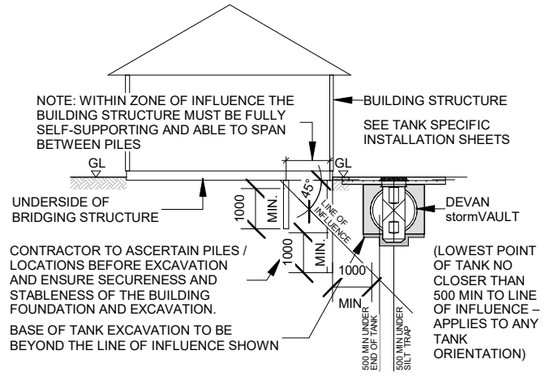


2 **TANK PLACEMENT NEAR PILED FOUNDATIONS**

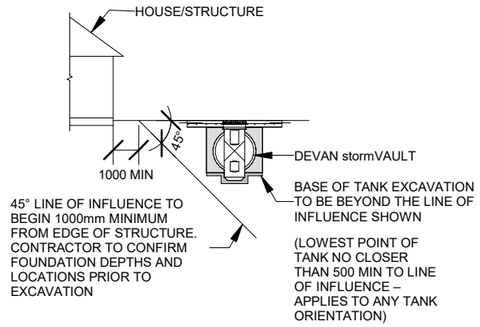


4 **TANK PLACEMENT NEAR BUILDING STRUCTURE**

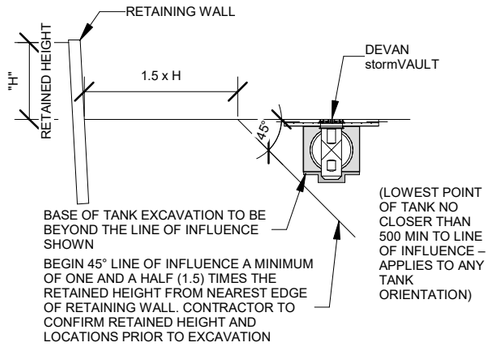


3 **TANK PLACEMENT NEAR RETAINING WALL**

IF DRIVEWAY IS EXISTING:
SCABBLE EDGE AND TIE WITH D12 DRILL AND EPOXY STARTERS AT 400mm CRS. 100mm MIN EMBEDMENT DEPTH INTO EXISTING SLAB, LAP 600mm INTO NEW TOPPING SLAB

IF DRIVEWAY IS NEW:
LAP TANK TOPPING STEEL WITH GENERAL DRIVEWAY REINFORCING. FULL LAP LENGTH REQUIRED (REFER TO SPECIFICATION SHEET)

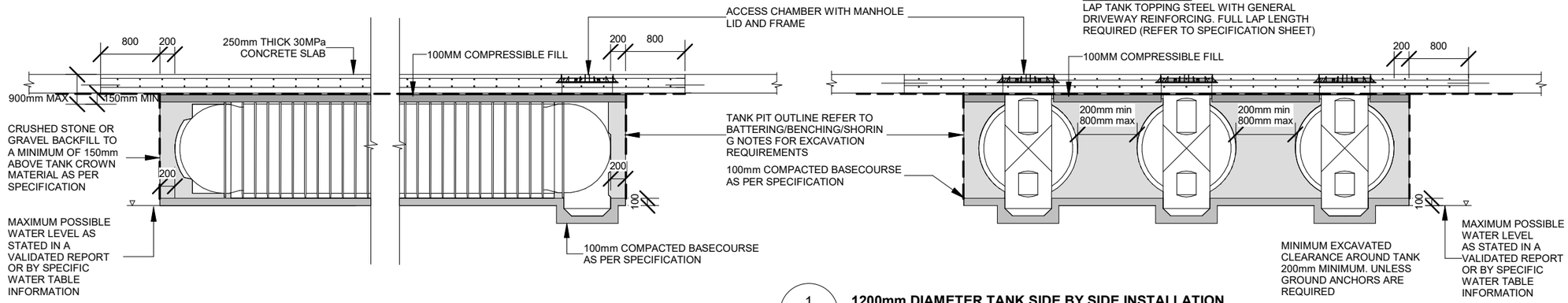


1 **1200mm DIAMETER TANK SIDE BY SIDE INSTALLATION**

NOTES:
- ALL DIMENSIONS IN MILLIMETRES UNO
- REFER TO STRUCTURAL SPECIFICATIONS SHEET OR CONCRETE REINFORCING & OTHER NOTES
- ALL LEVELS SHALL BE CONFIRMED BY THE CONTRACTOR PRIOR TO COMMENCEMENT OF WORK.
- ALL UNDERGROUND SERVICES SHALL BE CONFIRMED, LOCATED AND MARKED PRIOR TO ANY EXCAVATION WORKS,

- DEVAN PLASTICS LTD SHALL BE NOTIFIED IMMEDIATELY SHOULD ANY OF THE DESIGN PARAMETERS SHOWN ON THE DRAWINGS NOT BE ACHIEVABLE.

- REFER TO DEVAN PLASTICS LTD FOR MAXIMUM BURIAL DEPTH ALLOWANCES.

- TEMPORARY SUPPORT AND SHORING TO BE CARRIED OUT IN ACCORDANCE WITH WORKSAFE EXCAVATION SAFETY GUIDELINES.

- stormVAULT INSTALLATION TO BE CARRIED OUT IN CONJUCTION WITH DEVAN PRODUCT INFORMATION GUIDE AND THESE DRAWINGS

SOIL CONDITIONS
SITE SOIL CONDITIONS ALLOW FOR EXPANSIVE SOIL UP TO AND INCLUDING CLASS H2 AS DEFINED IN AS2870, PROVIDED AN ULTIMATE BEARING CAPACITY OF 300 KPA IS ACHIEVABLE FOR THE SUBGRADE DIRECTLY SUPPORTING THE SLAB AND THE BASECOURSE. NO ALLOWANCE FOR LIQUIFIABLE SOIL, OR SOIL WITH SLOPE STABILITY ISSUES. IT IS THE RESPONSIBILITY OF THE CONTRACTOR AND THE OWNER TO VERIFY THE SITE CONDITIONS PRIOR TO COMMENCING THE CONSTRUCTION WORKS.

TANK LOCATION - PROXIMITY TO NEARBY STRUCTURES:
IT IS THE CONTRACTOR AND OWNER'S RESPONSIBILITY TO ENSURE THAT THE LOCATION OF THE TANK WITH RESPECT TO ADJACENT STRUCTURES COMPLY WITH THE LIMITS AND RESTRICTIONS SET OUT IN THESE DRAWINGS. DEVAN PLASTICS LTD SHALL BE NOTIFIED IMMEDIATELY IF THOSE LIMITS ARE NOT ACHIEVABLE.

BACKFILL AND BASECOURSE:
GAP 10 or GAP 20 SHALL BE USED FOR BACKFILL AND BASECOURSE MATERIAL. ALTERNATIVE MATERIAL SHALL NOT BE USED WITHOUT THE WRITTEN APPROVAL OF DEVAN PLASTICS LTD.

CONTRACTOR SHALL BACKFILL LIFTS OF 150MM. THE CONTRACTOR SHALL USE THE APPROPRIATE TOOLS AND CONSTRUCTION TECHNIQUES TO ENSURE ALL VOIDS ARE FILLED ALONG THE FULL LENGTH OF THE TANK, ENSURING SUFFICIENT SUPPORT.

BATTERING/BENCHING/SHORING:
MANAGING THE STABILITY OF THE TRENCH DURING EXCAVATION IS THE RESPONSIBILITY OF THE CONTRACTOR, AND SHALL BE CARRIED OUT WITH THE RELEVANT GUIDELINES AND BEST PRACTICES IN ACCORDANCE WITH THE HEALTH AND SAFETY AT WORK ACT 2015. THIS INCLUDES, BUT NOT LIMITED TO, ANY EXCAVATIONS DEEPER THAN 1.5M. THE CONTRACTOR SHALL CONSULT WITH SUITABLE INDUSTRY PROFESIONALS SHOULD FURTHER GUIDANCE BE REQUIRED FOR BENCHING, BATTERING, AND SHORING.

LOADING:
VEHICLES UP TO 10,000kg "MEDIUM" TRAFFIC TABLE 3.1(g) NZS 1170.1, 5kPA / 31kN.
CONTRACTOR AND TANK OWNER TO ENSURE TANK POSITION DOES NOT EXPOSE THE TANK TO LOADS GREATER THAN SPECIFIED IN THESE DRAWINGS FOR THE DESIGN LIFE OF THE UNIT.

NOTE:
THIS SHEET IS FOR THE INSTALLATION OF TANKS ABOVE MAXIMUM POSSIBLE WATER TABLE LEVELS OR FOR INSTALLATIONS NOT REQUIRING ANCHOR PADS AS DETERMINED THROUGH "DEVAN PLASTICS stormVAULT UNDERGROUND CYLINDRICAL TANKS TOOLBOX VERSION 1.0 (OR HIGHER) CALCULATOR". IF TANKS ARE BEING INSTALLED ABOVE MAXIMUM POSSIBLE WATER TABLE LEVELS THEN SITE SPECIFIC REPORTS OR WATER TABLE INFORMATION MUST PROVE THE WATER LEVEL CAN NOT POSSIBLY RISE ABOVE THE BOTTOM OF THE EXCAVATION. IF THIS INFORMATION CAN NOT BE PROVIDED, REFER TO SHEET 059-003-S-305. IT IS THE RESPONSIBILITY OF THE CONTRACTOR AND OWNER TO ENSURE CORRECT TANK INSTALLATION IN ACCORDANCE WITH THE DEVAN INSTALLATION GUIDES AND DRAWINGS.

| REV | ISSUE | Date |
|---|---|---|
| 1 | FOR CONSTRUCTION | 16.04.25 |
| 0 | FOR CONSTRUCTION | 01.11.24 |

DESIGNED: SK
CHECKED: SK/RR
DRAWN: AS

Contact SENZ when in doubt. Refer to Architectural Drawings for set out, do not scale Structural Engineering Drawings


Business Address: L1, 52 Highbrook Drive, East Tamaki, Auckland 2013
Phone Number: +64 9 275 6029
Evening Number: +64 9 889 9350
E-mail Address: info@structural-engs.co.nz
Website: www.structural-engs.co.nz
SENZ Structural Engineers New Zealand


CLIENT: DEVAN

PROJECT
**DEVAN PLASTICS STANDARD DESIGN FOR UNDERGROUND TANKS**

FOR CONSTRUCTION

SHEET TITLE
**RESIDENTIAL TRAFFIC LOADING WITHOUT ANCHORS - TRIPLE TANK INSTALLATION INSTRUCTIONS - SLAB ON CLASS H2 EXPANSIVE SOIL**

SCALE: As indicated @ A3, 1:A3x2 @ A1
Drawing No.: 059-003 -S-304
REVISION: 1

NOTE:
stormVAULT 800mm TANKS MAY BE DIRECTLY SUBSTITUTED WITH THE stormVAULT 1200mm TANKS, PROVIDED ALL DIMENSIONAL CONSTRAINTS IN THESE DRAWINGS ARE FOLLOWED.

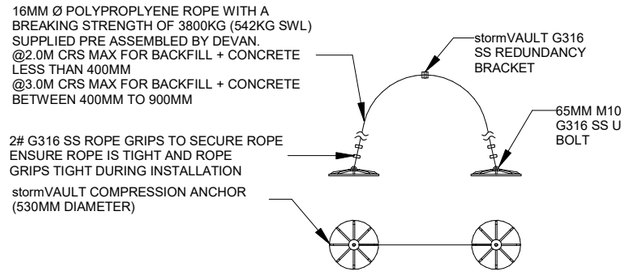


1 S-305 **DETAIL**

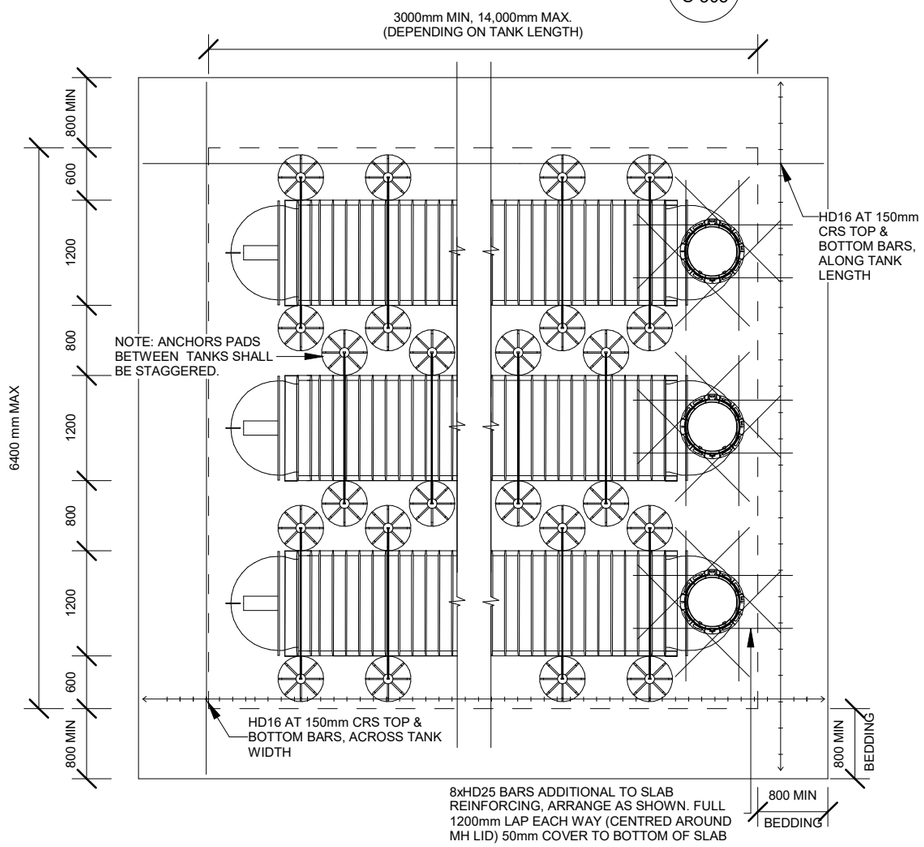


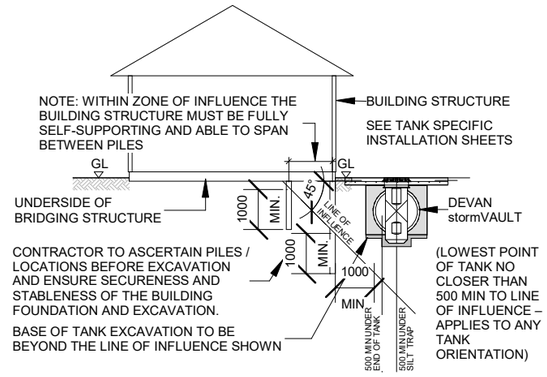


3 **TANK PLACEMENT NEAR PILED FOUNDATIONS**

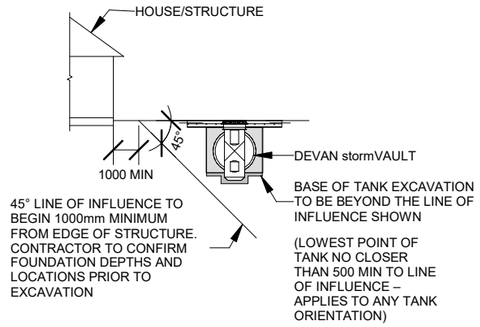


4 **TANK PLACEMENT NEAR BUILDING STRUCTURE**

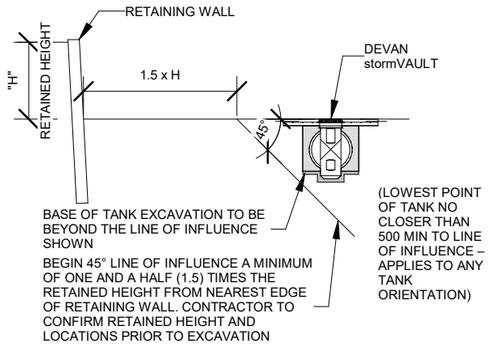


5 **TANK PLACEMENT NEAR RETAINING WALL**

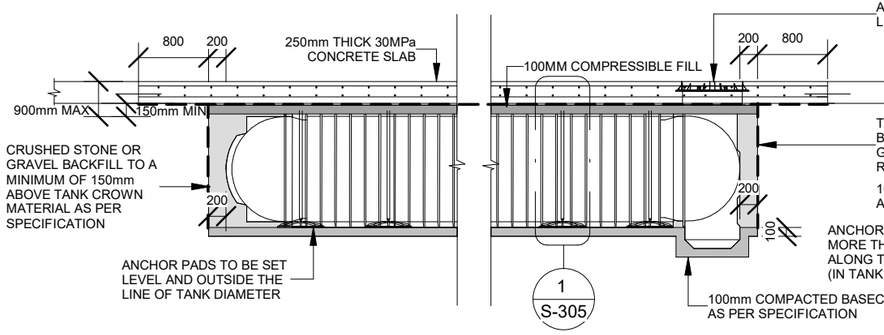


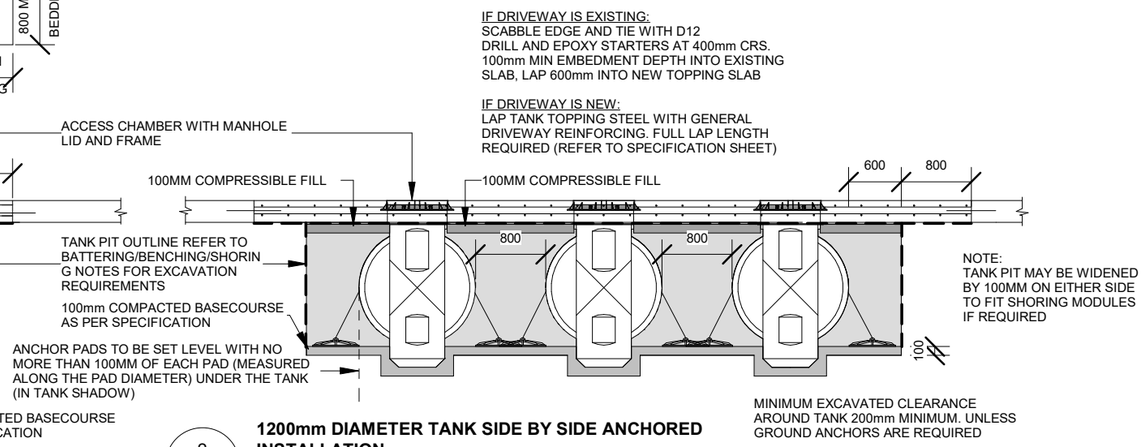


2 **1200mm DIAMETER TANK SIDE BY SIDE ANCHORED INSTALLATION**

NOTES:
- ALL DIMENSIONS IN MILLIMETRES UNO
- REFER TO STRUCTURAL SPECIFICATIONS SHEET OR CONCRETE REINFORCING & OTHER NOTES
- ALL LEVELS SHALL BE CONFIRMED BY THE CONTRACTOR PRIOR TO COMMENCEMENT OF WORK.
- ALL UNDERGROUND SERVICES SHALL BE CONFIRMED, LOCATED AND MARKED PRIOR TO ANY EXCAVATION WORKS,

- DEVAN PLASTICS LTD SHALL BE NOTIFIED IMMEDIATELY SHOULD ANY OF THE DESIGN PARAMETERS SHOWN ON THE DRAWINGS NOT BE ACHIEVABLE.

- REFER TO DEVAN PLASTICS LTD FOR MAXIMUM BURIAL DEPTH ALLOWANCES.

- TEMPORARY SUPPORT AND SHORING TO BE CARRIED OUT IN ACCORDANCE WITH WORKSAFE EXCAVATION SAFETY GUIDELINES.

- stormVAULT INSTALLATION TO BE CARRIED OUT IN CONJUCTION WITH DEVAN PRODUCT INFORMATION GUIDE AND THESE DRAWINGS

SOIL CONDITIONS
SITE SOIL CONDITIONS ALLOW FOR EXPANSIVE SOIL UP TO AND INCLUDING CLASS H2 AS DEFINED IN AS2870, PROVIDED AN ULTIMATE BEARING CAPACITY OF 300 KPA IS ACHIEVABLE FOR THE SUBGRADE DIRECTLY SUPPORTING THE SLAB AND THE BASECOURSE. NO ALLOWANCE FOR LIQUIFIABLE SOIL, OR SOIL WITH SLOPE STABILITY ISSUES. IT IS THE RESPONSIBILITY OF THE CONTRACTOR AND THE OWNER TO VERIFY THE SITE CONDITIONS PRIOR TO COMMENCING THE CONSTRUCTION WORKS.

TANK LOCATION - PROXIMITY TO NEARBY STRUCTURES:
IT IS THE CONTRACTOR AND OWNER'S RESPONSIBILITY TO ENSURE THAT THE LOCATION OF THE TANK WITH RESPECT TO ADJACENT STRUCTURES COMPLY WITH THE LIMITS AND RESTRICTIONS SET OUT IN THESE DRAWINGS. DEVAN PLASTICS LTD SHALL BE NOTIFIED IMMEDIATELY IF THOSE LIMITS ARE NOT ACHIEVABLE.

BACKFILL AND BASECOURSE:
GAP 10 or GAP 20 SHALL BE USED FOR BACKFILL AND BASECOURSE MATERIAL. ALTERNATIVE MATERIAL SHALL NOT BE USED WITHOUT THE WRITTEN APPROVAL OF DEVAN PLASTICS LTD.

CONTRACTOR SHALL BACKFILL LIFTS OF 150MM. THE CONTRACTOR SHALL USE THE APPROPRIATE TOOLS AND CONSTRUCTION TECHNIQUES TO ENSURE ALL VOIDS ARE FILLED ALONG THE FULL LENGTH OF THE TANK, ENSURING SUFFICIENT SUPPORT.

BATTERING/BENCHING/SHORING:
MANAGING THE STABILITY OF THE TRENCH DURING EXCAVATION IS THE RESPONSIBILITY OF THE CONTRACTOR, AND SHALL BE CARRIED OUT WITH THE RELEVANT GUIDELINES AND BEST PRACTICES IN ACCORDANCE WITH THE HEALTH AND SAFETY AT WORK ACT 2015. THIS INCLUDES, BUT NOT LIMITED TO, ANY EXCAVATIONS DEEPER THAN 1.5M. THE CONTRACTOR SHALL CONSULT WITH SUITABLE INDUSTRY PROFESIONALS SHOULD FURTHER GUIDANCE BE REQUIRED FOR BENCHING, BATTERING, AND SHORING.

LOADING:
VEHICLES UP TO 10,000kg "MEDIUM" TRAFFIC TABLE 3.1(g) NZS 1170.1, 5kPA / 31kN.
CONTRACTOR AND TANK OWNER TO ENSURE TANK POSITION DOES NOT EXPOSE THE TANK TO LOADS GREATER THAN SPECIFIED IN THESE DRAWINGS FOR THE DESIGN LIFE OF THE UNIT.

NOTE:
THIS SHEET IS FOR THE INSTALLATION OF TANKS REQUIRING ANCHOR PADS AS DETERMINED THROUGH "DEVAN PLASTICS stormVAULT UNDERGROUND CYLINDRICAL TANKS TOOLBOX VERSION 1.0 (OR HIGHER) CALCULATOR". IT IS THE RESPONSIBILITY OF THE CONTRACTOR AND OWNER TO ENSURE CORRECT TANK INSTALLATION IN ACCORDANCE WITH THE DEVAN INSTALLATION GUIDES AND DRAWINGS.

| REV | ISSUE | Date |
|---|---|---|
| 1 | FOR CONSTRUCTION | 16.04.25 |
| 0 | FOR CONSTRUCTION | 01.11.24 |

| | | |
|---|---|---|
| DESIGNED | SK | Contact SENZ when in doubt. Refer to Architectural Drawings for set out, do not scale Structural Engineering Drawings |
| CHECKED | SK/RR | Business Address: L1, 52 Highbrook Drive, East Tamaki, Auckland 2013<br>Phone Number: +64 9 275 6029<br>Evening Number: +64 9 889 9350<br>E-mail Address: info@structural-engs.co.nz<br>Website: www.structural-engs.co.nz |
| DRAWN | AS | |

SENZ Structural Engineers New Zealand

CLIENT DEVAN

PROJECT
**DEVAN PLASTICS STANDARD DESIGN FOR UNDERGROUND TANKS**

SHEET TITLE
**RESIDENTIAL TRAFFIC LOADING - TRIPLE TANK INSTALLATION INSTRUCTIONS WITH ANCHORS - SLAB ON CLASS H2 EXPANSIVE SOIL**

FOR CONSTRUCTION

| SCALE | Drawing No. | REVISION |
|---|---|---|
| As indicated @ A3<br>1:A3x2 @ A1 | 059-003 -S-305 | 1 |

NOTE:
stormVAULT 800mm TANKS MAY BE DIRECTLY SUBSTITUTED WITH THE stormVAULT 1200mm TANKS, PROVIDED ALL DIMENSIONAL CONSTRAINTS IN THESE DRAWINGS ARE FOLLOWED.

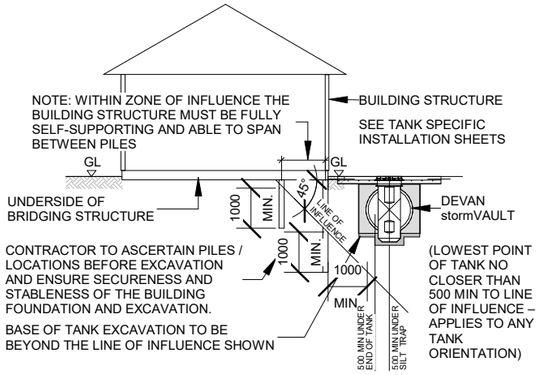


2 **TANK PLACEMENT NEAR PILED FOUNDATIONS**

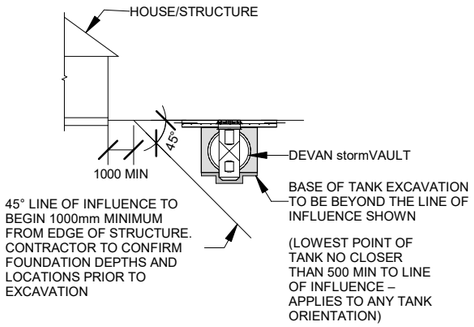


3 **TANK PLACEMENT NEAR BUILDING STRUCTURE**

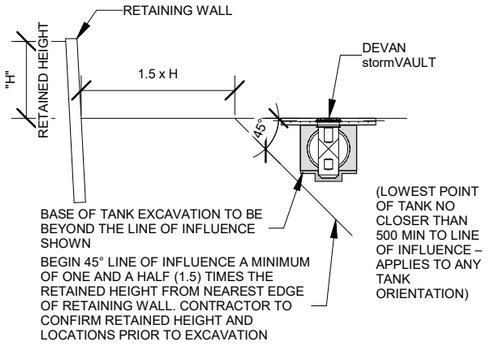


4 **TANK PLACEMENT NEAR RETAINING WALL**

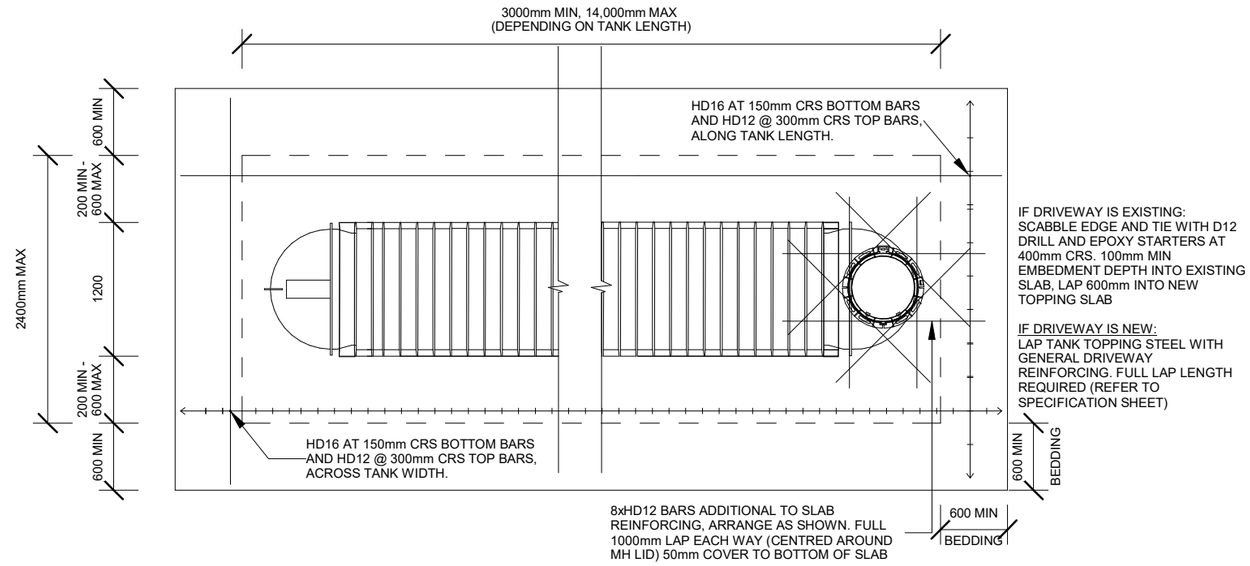


IF DRIVEWAY IS EXISTING:
SCABBLE EDGE AND TIE WITH D12 DRILL AND EPOXY STARTERS AT 400mm CRS. 100mm MIN EMBEDMENT DEPTH INTO EXISTING SLAB, LAP 600mm INTO NEW TOPPING SLAB

IF DRIVEWAY IS NEW:
LAP TANK TOPPING STEEL WITH GENERAL DRIVEWAY REINFORCING. FULL LAP LENGTH REQUIRED (REFER TO SPECIFICATION SHEET)

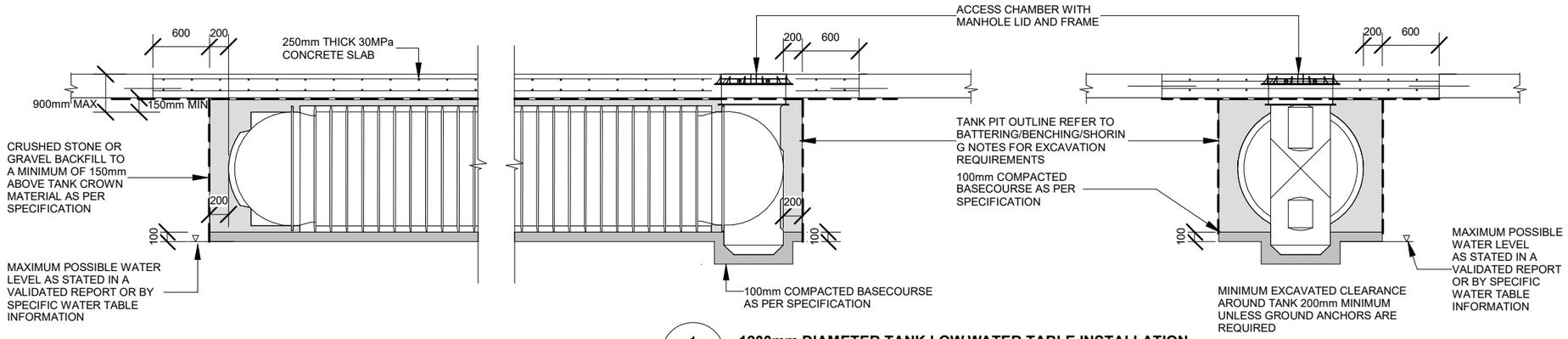


1 **1200mm DIAMETER TANK LOW WATER TABLE INSTALLATION**

NOTES:
- ALL DIMENSIONS IN MILLIMETRES UNO
- REFER TO STRUCTURAL SPECIFICATIONS SHEET OR CONCRETE REINFORCING & OTHER NOTES
- ALL LEVELS SHALL BE CONFIRMED BY THE CONTRACTOR PRIOR TO COMMENCEMENT OF WORK.
- ALL UNDERGROUND SERVICES SHALL BE CONFIRMED, LOCATED AND MARKED PRIOR TO ANY EXCAVATION WORKS,

- DEVAN PLASTICS LTD SHALL BE NOTIFIED IMMEDIATELY SHOULD ANY OF THE DESIGN PARAMETERS SHOWN ON THE DRAWINGS NOT BE ACHIEVABLE.

- REFER TO DEVAN PLASTICS LTD FOR MAXIMUM BURIAL DEPTH ALLOWANCES.

- TEMPORARY SUPPORT AND SHORING TO BE CARRIED OUT IN ACCORDANCE WITH WORKSAFE EXCAVATION SAFETY GUIDELINES.

- stormVAULT INSTALLATION TO BE CARRIED OUT IN CONJUCTION WITH DEVAN PRODUCT INFORMATION GUIDE AND THESE DRAWINGS

SOIL CONDITIONS
SITE SOIL CONDITIONS ARE CONSISTENT WITH "GOOD GROUND" AS DEFINED IN NZS3604:2011. i.e. NO ALLOWANCE FOR EXPANSIVE OR LIQUIFIABLE SOIL, OR SOIL WITH SLOPE STABILITY ISSUES. IT IS THE RESPONSIBILITY OF THE CONTRACTOR AND THE OWNER TO VERIFY THE SITE CONDITIONS PRIOR TO COMMENCING THE CONSTRUCTION WORKS.

TANK LOCATION - PROXIMITY TO NEARBY STRUCTURES:
IT IS THE CONTRACTOR AND OWNER'S RESPONSIBILITY TO ENSURE THAT THE LOCATION OF THE TANK WITH RESPECT TO ADJACENT STRUCTURES COMPLY WITH THE LIMITS AND RESTRICTIONS SET OUT IN THESE DRAWINGS. DEVAN PLASTICS LTD SHALL BE NOTIFIED IMMEDIATELY IF THOSE LIMITS ARE NOT ACHIEVABLE.

BACKFILL AND BASECOURSE:
GAP 10 or GAP 20 SHALL BE USED FOR BACKFILL AND BASECOURSE MATERIAL. ALTERNATIVE MATERIAL SHALL NOT BE USED WITHOUT THE WRITTEN APPROVAL OF DEVAN PLASTICS LTD.

CONTRACTOR SHALL BACKFILL LIFTS OF 150MM. THE CONTRACTOR SHALL USE THE APPROPRIATE TOOLS AND CONSTRUCTION TECHNIQUES TO ENSURE ALL VOIDS ARE FILLED ALONG THE FULL LENGTH OF THE TANK, ENSURING SUFFICIENT SUPPORT.

BATTERING/BENCHING/SHORING:
MANAGING THE STABILITY OF THE TRENCH DURING EXCAVATION IS THE RESPONSIBILITY OF THE CONTRACTOR, AND SHALL BE CARRIED OUT WITH THE RELEVANT GUIDELINES AND BEST PRACTICES IN ACCORDANCE WITH THE HEALTH AND SAFETY AT WORK ACT 2015. THIS INCLUDES, BUT NOT LIMITED TO, ANY EXCAVATIONS DEEPER THAN 1.5M. THE CONTRACTOR SHALL CONSULT WITH SUITABLE INDUSTRY PROFESIONALS SHOULD FURTHER GUIDANCE BE REQUIRED FOR BENCHING, BATTERING, AND SHORING.

LOADING:
COMMERCIAL VEHICLES WITH MAX AXLE LOAD OF 120kN (NZTA HN LOADING)
CONTRACTOR AND TANK OWNER TO ENSURE TANK POSITION DOES NOT EXPOSE THE TANK TO LOADS GREATER THAN SPECIFIED IN THESE DRAWINGS FOR THE DESIGN LIFE OF THE UNIT.

NOTE:
THIS SHEET IS FOR THE INSTALLATION OF TANKS ABOVE MAXIMUM POSSIBLE WATER TABLE LEVELS OR FOR INSTALLATIONS NOT REQUIRING ANCHOR PADS AS DETERMINED THROUGH "DEVAN PLASTICS stormVAULT UNDERGROUND CYLINDRICAL TANKS TOOLBOX VERSION 1.0 (OR HIGHER) CALCULATOR". IF TANKS ARE BEING INSTALLED ABOVE MAXIMUM POSSIBLE WATER TABLE LEVELS THEN SITE SPECIFIC REPORTS OR WATER TABLE INFORMATION MUST PROVE THE WATER LEVEL CAN NOT POSSIBLY RISE ABOVE THE BOTTOM OF THE EXCAVATION. IF THIS INFORMATION CAN NOT BE PROVIDED, REFER TO SHEET 059-003-S-401. IT IS THE RESPONSIBILITY OF THE CONTRACTOR AND OWNER TO ENSURE CORRECT TANK INSTALLATION IN ACCORDANCE WITH THE DEVAN INSTALLATION GUIDES AND DRAWINGS.

| REV | ISSUE | Date |
|---|---|---|
| 1 | FOR CONSTRUCTION | 16.04.25 |
| 0 | FOR CONSTRUCTION | 01.11.24 |

| | | |
|---|---|---|
| DESIGNED | SK | Contact SENZ when in doubt. Refer to Architectural Drawings for set out, do not scale Structural Engineering Drawings |
| CHECKED | SK/RR | Business Address: L1, 52 Highbrook Drive, East Tamaki, Auckland 2013 |
| DRAWN | AS | Phone Number: +64 9 275 6029<br>Evening Number: +64 9 889 9350<br>E-mail Address: info@structural-engs.co.nz<br>Website: www.structural-engs.co.nz |

SENZ Structural Engineers New Zealand

CLIENT DEVAN

PROJECT
**DEVAN PLASTICS STANDARD DESIGN FOR UNDERGROUND TANKS**

SHEET TITLE
**HN COMMERCIAL TRAFFIC LOADING - SINGLE TANK INSTALLATION INSTRUCTIONS WITHOUT ANCHORS - SLAB ON GOOD GROUND**

FOR CONSTRUCTION

| SCALE | Drawing No. | REVISION |
|---|---|---|
| As indicated @ A3<br>1:A3x2 @ A1 | 059-003 -S-400 | 1 |

NOTE:
stormVAULT 800mm TANKS MAY BE DIRECTLY SUBSTITUTED WITH THE stormVAULT 1200mm TANKS, PROVIDED ALL DIMENSIONAL CONSTRAINTS IN THESE DRAWINGS ARE FOLLOWED.

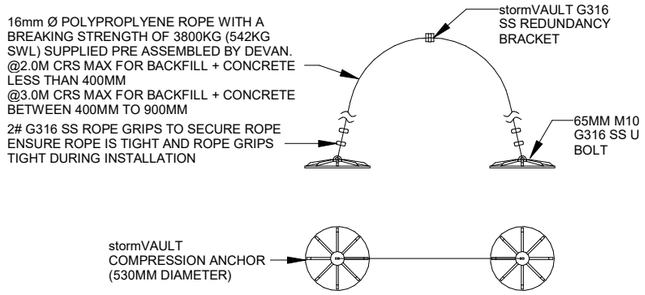


1 S-401 **DETAIL**

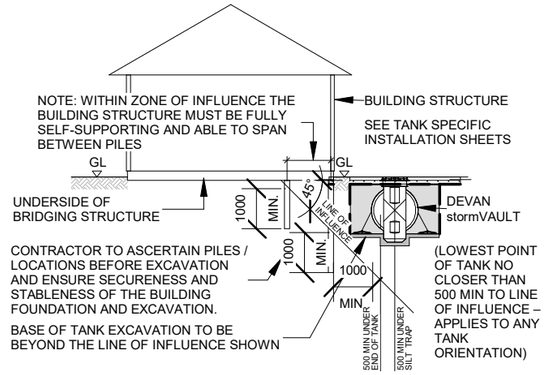


3 **TANK PLACEMENT NEAR PILED FOUNDATIONS**

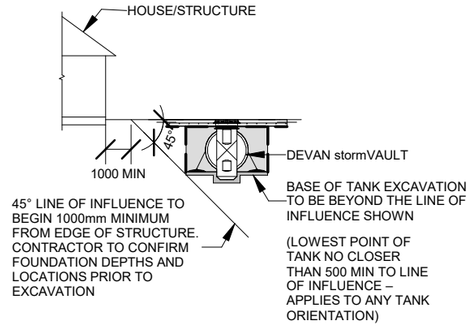


4 **TANK PLACEMENT NEAR BUILDING STRUCTURE**

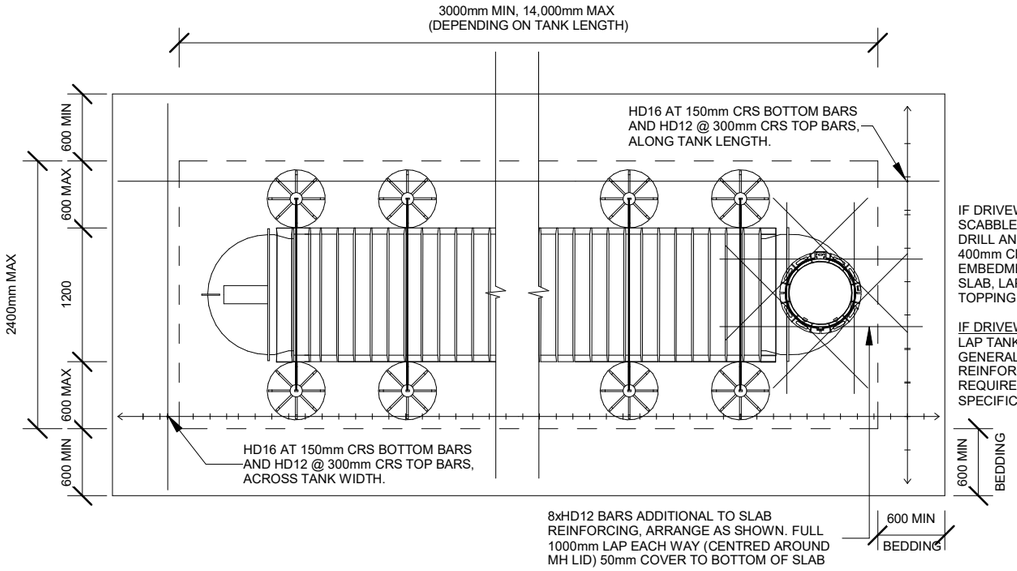


IF DRIVEWAY IS EXISTING:
SCABBLE EDGE AND TIE WITH D12 DRILL AND EPOXY STARTERS AT 400mm CRS. 100mm MIN EMBEDMENT DEPTH INTO EXISTING SLAB, LAP 600mm INTO NEW TOPPING SLAB

IF DRIVEWAY IS NEW:
LAP TANK TOPPING STEEL WITH GENERAL DRIVEWAY REINFORCING. FULL LAP LENGTH REQUIRED (REFER TO SPECIFICATION SHEET)

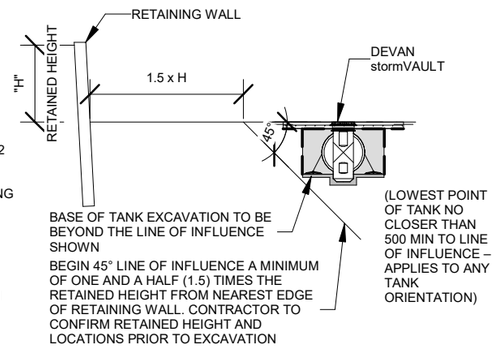


5 **TANK PLACEMENT NEAR RETAINING WALL**

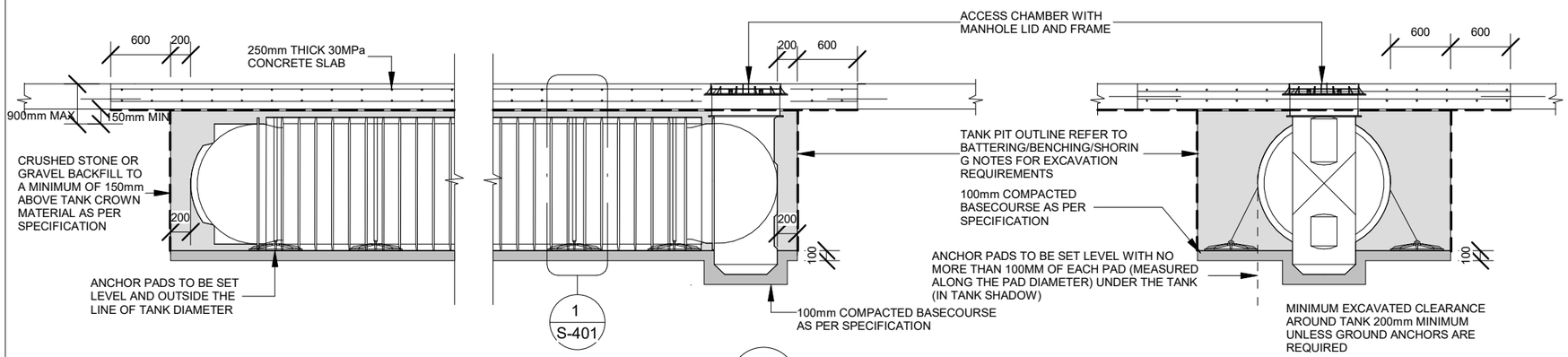


NOTE:
TANK PIT MAY BE WIDENED BY 100MM ON EITHER SIDE TO FIT SHORING MODULES IF REQUIRED

2 **1200mm DIAMETER TANK ANCHORED INSTALLATION**

NOTES:
- ALL DIMENSIONS IN MILLIMETRES UNO
- REFER TO STRUCTURAL SPECIFICATIONS SHEET OR CONCRETE REINFORCING & OTHER NOTES
- ALL LEVELS SHALL BE CONFIRMED BY THE CONTRACTOR PRIOR TO COMMENCEMENT OF WORK.
- ALL UNDERGROUND SERVICES SHALL BE CONFIRMED, LOCATED AND MARKED PRIOR TO ANY EXCAVATION WORKS,

- DEVAN PLASTICS LTD SHALL BE NOTIFIED IMMEDIATELY SHOULD ANY OF THE DESIGN PARAMETERS SHOWN ON THE DRAWINGS NOT BE ACHIEVABLE.

- REFER TO DEVAN PLASTICS LTD FOR MAXIMUM BURIAL DEPTH ALLOWANCES.

- TEMPORARY SUPPORT AND SHORING TO BE CARRIED OUT IN ACCORDANCE WITH WORKSAFE EXCAVATION SAFETY GUIDELINES.

- stormVAULT INSTALLATION TO BE CARRIED OUT IN CONJUCTION WITH DEVAN PRODUCT INFORMATION GUIDE AND THESE DRAWINGS

SOIL CONDITIONS
SITE SOIL CONDITIONS ARE CONSISTENT WITH "GOOD GROUND" AS DEFINED IN NZS3604:2011. i.e. NO ALLOWANCE FOR EXPANSIVE OR LIQUIFIABLE SOIL, OR SOIL WITH SLOPE STABILITY ISSUES. IT IS THE RESPONSIBILITY OF THE CONTRACTOR AND THE OWNER TO VERIFY THE SITE CONDITIONS PRIOR TO COMMENCING THE CONSTRUCTION WORKS.

TANK LOCATION - PROXIMITY TO NEARBY STRUCTURES:
IT IS THE CONTRACTOR AND OWNER'S RESPONSIBILITY TO ENSURE THAT THE LOCATION OF THE TANK WITH RESPECT TO ADJACENT STRUCTURES COMPLY WITH THE LIMITS AND RESTRICTIONS SET OUT IN THESE DRAWINGS. DEVAN PLASTICS LTD SHALL BE NOTIFIED IMMEDIATELY IF THOSE LIMITS ARE NOT ACHIEVABLE.

BACKFILL AND BASECOURSE:
GAP 10 or GAP 20 SHALL BE USED FOR BACKFILL AND BASECOURSE MATERIAL. ALTERNATIVE MATERIAL SHALL NOT BE USED WITHOUT THE WRITTEN APPROVAL OF DEVAN PLASTICS LTD.

CONTRACTOR SHALL BACKFILL LIFTS OF 150MM. THE CONTRACTOR SHALL USE THE APPROPRIATE TOOLS AND CONSTRUCTION TECHNIQUES TO ENSURE ALL VOIDS ARE FILLED ALONG THE FULL LENGTH OF THE TANK, ENSURING SUFFICIENT SUPPORT.

BATTERING/BENCHING/SHORING:
MANAGING THE STABILITY OF THE TRENCH DURING EXCAVATION IS THE RESPONSIBILITY OF THE CONTRACTOR, AND SHALL BE CARRIED OUT WITH THE RELEVANT GUIDELINES AND BEST PRACTICES IN ACCORDANCE WITH THE HEALTH AND SAFETY AT WORK ACT 2015. THIS INCLUDES, BUT NOT LIMITED TO, ANY EXCAVATIONS DEEPER THAN 1.5M. THE CONTRACTOR SHALL CONSULT WITH SUITABLE INDUSTRY PROFESIONALS SHOULD FURTHER GUIDANCE BE REQUIRED FOR BENCHING, BATTERING, AND SHORING.

LOADING:
COMMERCIAL VEHICLES WITH MAX AXLE LOAD OF 120kN (NZTA HN LOADING)
CONTRACTOR AND TANK OWNER TO ENSURE TANK POSITION DOES NOT EXPOSE THE TANK TO LOADS GREATER THAN SPECIFIED IN THESE DRAWINGS FOR THE DESIGN LIFE OF THE UNIT.

NOTE:
THIS SHEET IS FOR THE INSTALLATION OF TANKS REQUIRING ANCHOR PADS AS DETERMINED THROUGH "DEVAN PLASTICS stormVAULT UNDERGROUND CYLINDRICAL TANKS TOOLBOX VERSION 1.0 (OR HIGHER) CALCULATOR". IT IS THE RESPONSIBILITY OF THE CONTRACTOR AND OWNER TO ENSURE CORRECT TANK INSTALLATION IN ACCORDANCE WITH THE DEVAN INSTALLATION GUIDES AND DRAWINGS.

| REV | ISSUE | Date |
|---|---|---|
| 1 | FOR CONSTRUCTION | 16.04.25 |
| 0 | FOR CONSTRUCTION | 01.11.24 |

| | |
|---|---|
| DESIGNED | SK |
| CHECKED | SK/RR |
| DRAWN | AS |


Contact SENZ when in doubt. Refer to Architectural Drawings for set out, do not scale Structural Engineering Drawings

Business Address: L1, 52 Highbrook Drive, East Tamaki, Auckland 2013
Phone Number: +64 9 275 6029
Evening Number: +64 9 889 9350
E-mail Address: info@structural-engs.co.nz
Website: www.structural-engs.co.nz

SENZ Structural Engineers New Zealand


CLIENT DEVAN

PROJECT
**DEVAN PLASTICS STANDARD DESIGN FOR UNDERGROUND TANKS**

FOR CONSTRUCTION

SHEET TITLE
**HN COMMERCIAL TRAFFIC LOADING - SINGLE TANK INSTALLATION INSTRUCTIONS WITH ANCHORS - SLAB ON GOOD GROUND**

| SCALE | Drawing No. | REVISION |
|---|---|---|
| As indicated @ A3<br>1:A3x2 @ A1 | 059-003 -S-401 | 1 |

NOTE:
stormVAULT 800mm TANKS MAY BE DIRECTLY SUBSTITUTED WITH THE stormVAULT 1200mm TANKS, PROVIDED ALL DIMENSIONAL CONSTRAINTS IN THESE DRAWINGS ARE FOLLOWED.

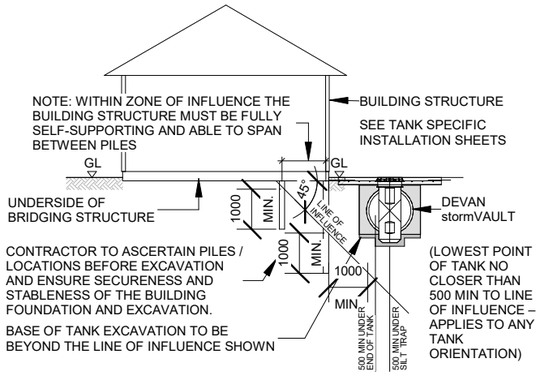


2 **TANK PLACEMENT NEAR PILED FOUNDATIONS**

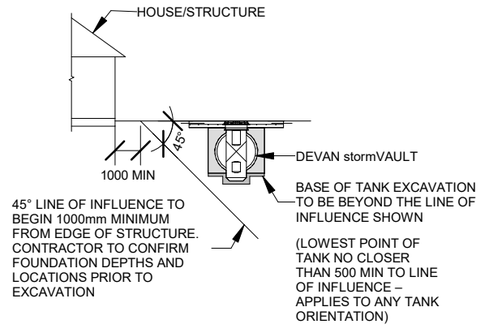


3 **TANK PLACEMENT NEAR BUILDING STRUCTURE**

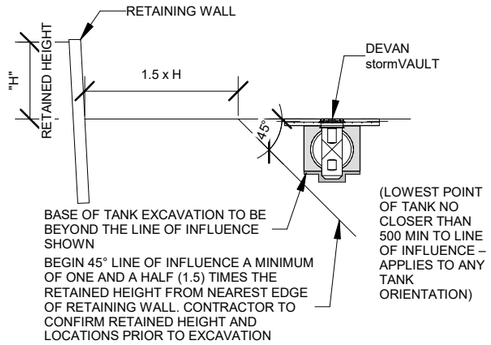


4 **TANK PLACEMENT NEAR RETAINING WALL**

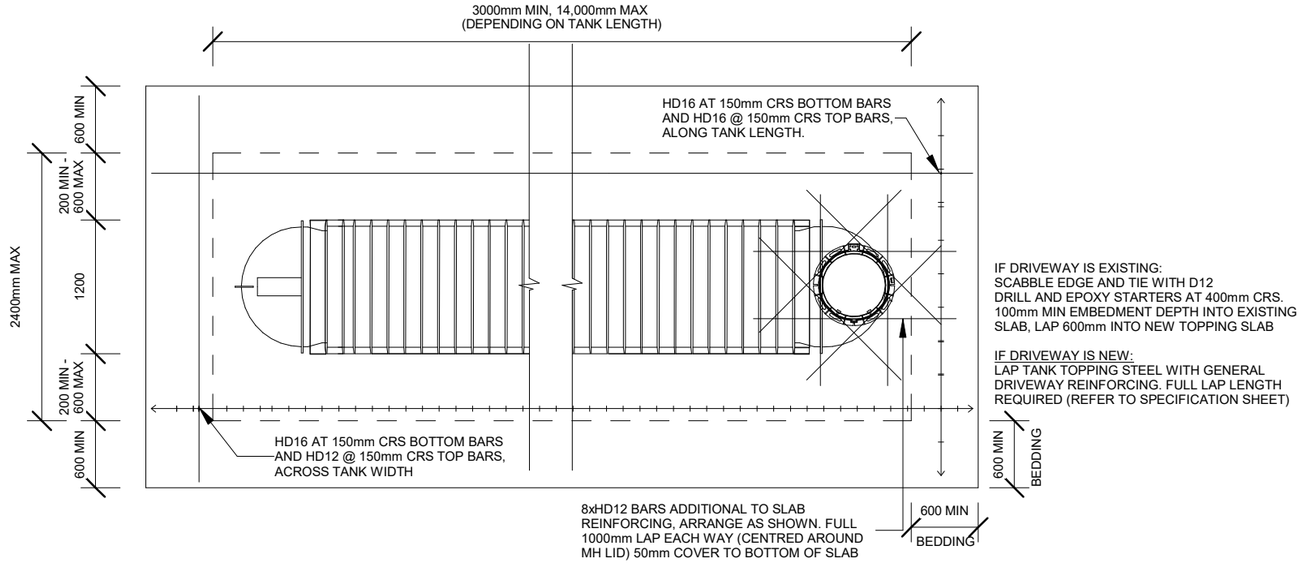


IF DRIVEWAY IS EXISTING:
SCABBLE EDGE AND TIE WITH D12 DRILL AND EPOXY STARTERS AT 400mm CRS. 100mm MIN EMBEDMENT DEPTH INTO EXISTING SLAB, LAP 600mm INTO NEW TOPPING SLAB

IF DRIVEWAY IS NEW:
LAP TANK TOPPING STEEL WITH GENERAL DRIVEWAY REINFORCING. FULL LAP LENGTH REQUIRED (REFER TO SPECIFICATION SHEET)

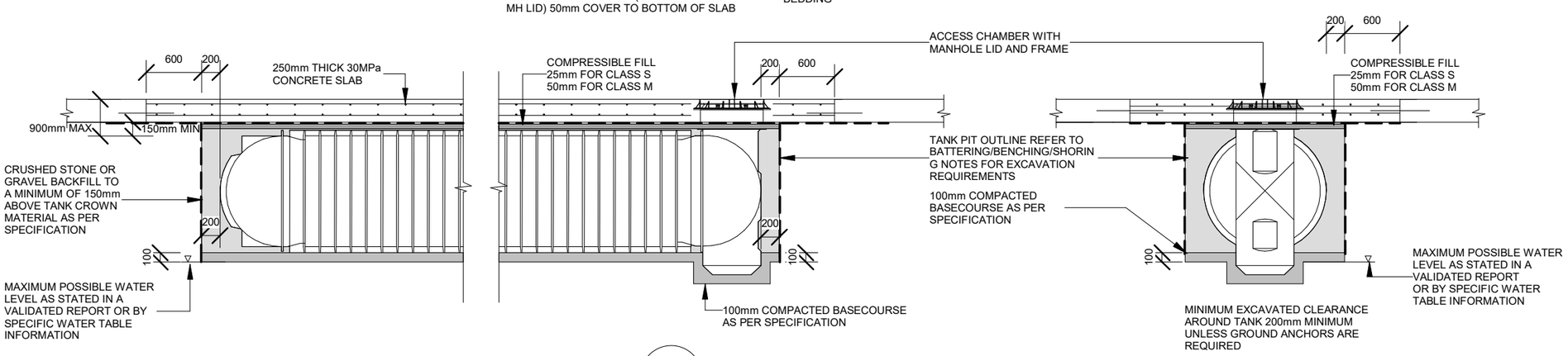


1 **1200mm DIAMETER TANK LOW WATER TABLE INSTALLATION**

NOTES:
- ALL DIMENSIONS IN MILLIMETRES UNO
- REFER TO STRUCTURAL SPECIFICATIONS SHEET OR CONCRETE REINFORCING & OTHER NOTES
- ALL LEVELS SHALL BE CONFIRMED BY THE CONTRACTOR PRIOR TO COMMENCEMENT OF WORK.
- ALL UNDERGROUND SERVICES SHALL BE CONFIRMED, LOCATED AND MARKED PRIOR TO ANY EXCAVATION WORKS,

- DEVAN PLASTICS LTD SHALL BE NOTIFIED IMMEDIATELY SHOULD ANY OF THE DESIGN PARAMETERS SHOWN ON THE DRAWINGS NOT BE ACHIEVABLE.

- REFER TO DEVAN PLASTICS LTD FOR MAXIMUM BURIAL DEPTH ALLOWANCES.

- TEMPORARY SUPPORT AND SHORING TO BE CARRIED OUT IN ACCORDANCE WITH WORKSAFE EXCAVATION SAFETY GUIDELINES.

- stormVAULT INSTALLATION TO BE CARRIED OUT IN CONJUCTION WITH DEVAN PRODUCT INFORMATION GUIDE AND THESE DRAWINGS

SOIL CONDITIONS
SITE SOIL CONDITIONS ALLOW FOR EXPANSIVE SOIL UP TO AND INCLUDING CLASS M AS DEFINED IN AS2870, PROVIDED AN ULTIMATE BEARING CAPACITY OF 300 KPA IS ACHIEVABLE FOR THE SUBGRADE DIRECTLY SUPPORTING THE SLAB AND THE BASECOURSE. NO ALLOWANCE FOR LIQUIFIABLE SOIL, OR SOIL WITH SLOPE STABILITY ISSUES. IT IS THE RESPONSIBILITY OF THE CONTRACTOR AND THE OWNER TO VERIFY THE SITE CONDITIONS PRIOR TO COMMENCING THE CONSTRUCTION WORKS.

TANK LOCATION - PROXIMITY TO NEARBY STRUCTURES:
IT IS THE CONTRACTOR AND OWNER'S RESPONSIBILITY TO ENSURE THAT THE LOCATION OF THE TANK WITH RESPECT TO ADJACENT STRUCTURES COMPLY WITH THE LIMITS AND RESTRICTIONS SET OUT IN THESE DRAWINGS. DEVAN PLASTICS LTD SHALL BE NOTIFIED IMMEDIATELY IF THOSE LIMITS ARE NOT ACHIEVABLE.

BACKFILL AND BASECOURSE:
GAP 10 or GAP 20 SHALL BE USED FOR BACKFILL AND BASECOURSE MATERIAL. ALTERNATIVE MATERIAL SHALL NOT BE USED WITHOUT THE WRITTEN APPROVAL OF DEVAN PLASTICS LTD.

CONTRACTOR SHALL BACKFILL LIFTS OF 150MM. THE CONTRACTOR SHALL USE THE APPROPRIATE TOOLS AND CONSTRUCTION TECHNIQUES TO ENSURE ALL VOIDS ARE FILLED ALONG THE FULL LENGTH OF THE TANK, ENSURING SUFFICIENT SUPPORT.

BATTERING/BENCHING/SHORING:
MANAGING THE STABILITY OF THE TRENCH DURING EXCAVATION IS THE RESPONSIBILITY OF THE CONTRACTOR, AND SHALL BE CARRIED OUT WITH THE RELEVANT GUIDELINES AND BEST PRACTICES IN ACCORDANCE WITH THE HEALTH AND SAFETY AT WORK ACT 2015. THIS INCLUDES, BUT NOT LIMITED TO, ANY EXCAVATIONS DEEPER THAN 1.5M. THE CONTRACTOR SHALL CONSULT WITH SUITABLE INDUSTRY PROFESIONALS SHOULD FURTHER GUIDANCE BE REQUIRED FOR BENCHING, BATTERING, AND SHORING.

LOADING:
COMMERCIAL VEHICLES WITH MAX AXLE LOAD OF 120kN (NZTA HN LOADING)
CONTRACTOR AND TANK OWNER TO ENSURE TANK POSITION DOES NOT EXPOSE THE TANK TO LOADS GREATER THAN SPECIFIED IN THESE DRAWINGS FOR THE DESIGN LIFE OF THE UNIT.

NOTE:
THIS SHEET IS FOR THE INSTALLATION OF TANKS ABOVE MAXIMUM POSSIBLE WATER TABLE LEVELS OR FOR INSTALLATIONS NOT REQUIRING ANCHOR PADS AS DETERMINED THROUGH "DEVAN PLASTICS stormVAULT UNDERGROUND CYLINDRICAL TANKS TOOLBOX VERSION 1.0 (OR HIGHER) CALCULATOR". IF TANKS ARE BEING INSTALLED ABOVE MAXIMUM POSSIBLE WATER TABLE LEVELS THEN SITE SPECIFIC REPORTS OR WATER TABLE INFORMATION MUST PROVE THE WATER LEVEL CAN NOT POSSIBLY RISE ABOVE THE BOTTOM OF THE EXCAVATION. IF THIS INFORMATION CAN NOT BE PROVIDED, REFER TO SHEET 059-003-S-403. IT IS THE RESPONSIBILITY OF THE CONTRACTOR AND OWNER TO ENSURE CORRECT TANK INSTALLATION IN ACCORDANCE WITH THE DEVAN INSTALLATION GUIDES AND DRAWINGS.

| REV | ISSUE | Date |
|---|---|---|
| 1 | FOR CONSTRUCTION | 16.04.25 |
| 0 | FOR CONSTRUCTION | 01.11.24 |

| | | |
|---|---|---|
| DESIGNED | SK | Contact SENZ when in doubt. Refer to Architectural Drawings for set out, do not scale Structural Engineering Drawings |
| CHECKED | SK/RR | |
| DRAWN | AS | |


Business Address: L1, 52 Highbrook Drive, East Tamaki, Auckland 2013
Phone Number: +64 9 275 6029
Evening Number: +64 9 889 9350
E-mail Address: info@structural-engs.co.nz
Website: www.structural-engs.co.nz


SENZ Structural Engineers New Zealand

CLIENT DEVAN

PROJECT
**DEVAN PLASTICS STANDARD DESIGN FOR UNDERGROUND TANKS**

FOR CONSTRUCTION

SHEET TITLE
**HN COMMERCIAL TRAFFIC LOADING - SINGLE TANK INSTALLATION INSTRUCTIONS WITHOUT ANCHORS - SLAB ON CLASS M EXPANSIVE SOIL**

SCALE: As indicated @ A3, 1:A3x2 @ A1

Drawing No. 059-003 -S-402

REVISION 1

NOTE:
stormVAULT 800mm TANKS MAY BE DIRECTLY SUBSTITUTED WITH THE stormVAULT 1200mm TANKS, PROVIDED ALL DIMENSIONAL CONSTRAINTS IN THESE DRAWINGS ARE FOLLOWED.

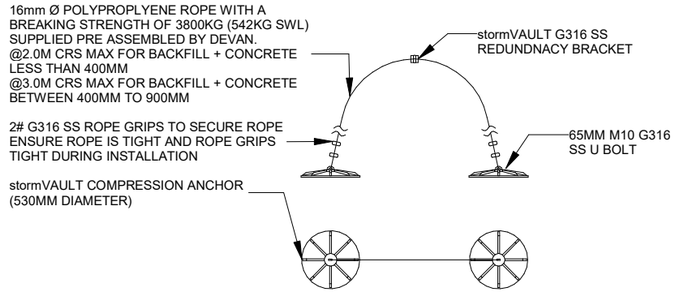


1 S-403 **DETAIL**

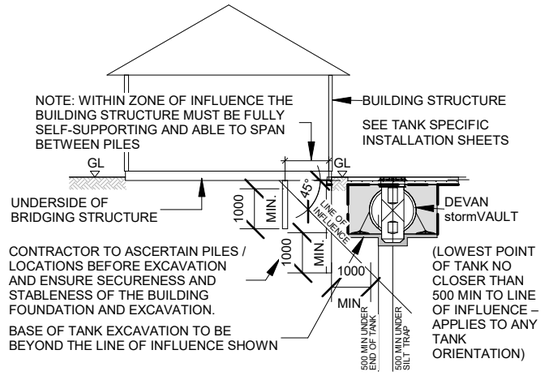


3 **TANK PLACEMENT NEAR PILED FOUNDATIONS**

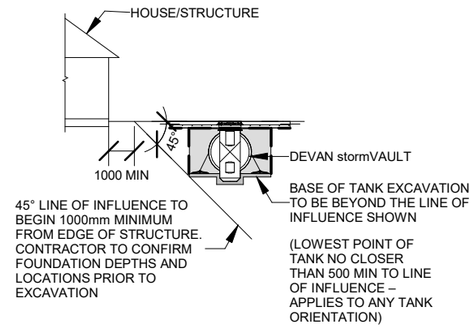


4 **TANK PLACEMENT NEAR BUILDING STRUCTURE**

NOTES:
- ALL DIMENSIONS IN MILLIMETRES UNO
- REFER TO STRUCTURAL SPECIFICATIONS SHEET OR CONCRETE REINFORCING & OTHER NOTES
- ALL LEVELS SHALL BE CONFIRMED BY THE CONTRACTOR PRIOR TO COMMENCEMENT OF WORK.
- ALL UNDERGROUND SERVICES SHALL BE CONFIRMED, LOCATED AND MARKED PRIOR TO ANY EXCAVATION WORKS,

- DEVAN PLASTICS LTD SHALL BE NOTIFIED IMMEDIATELY SHOULD ANY OF THE DESIGN PARAMETERS SHOWN ON THE DRAWINGS NOT BE ACHIEVABLE.

- REFER TO DEVAN PLASTICS LTD FOR MAXIMUM BURIAL DEPTH ALLOWANCES.

- TEMPORARY SUPPORT AND SHORING TO BE CARRIED OUT IN ACCORDANCE WITH WORKSAFE EXCAVATION SAFETY GUIDELINES.

- stormVAULT INSTALLATION TO BE CARRIED OUT IN CONJUCTION WITH DEVAN PRODUCT INFORMATION GUIDE AND THESE DRAWINGS

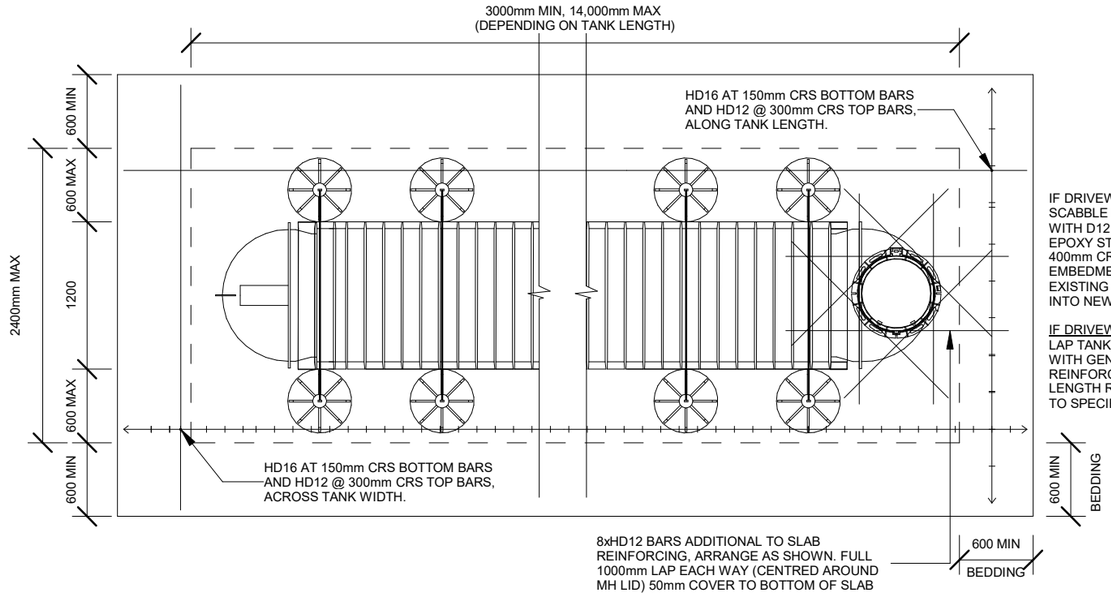


IF DRIVEWAY IS EXISTING: SCABBLE EDGE AND TIE WITH D12 DRILL AND EPOXY STARTERS AT 400mm CRS. 100mm MIN EMBEDMENT DEPTH INTO EXISTING SLAB, LAP 600mm INTO NEW TOPPING SLAB

IF DRIVEWAY IS NEW:
LAP TANK TOPPING STEEL WITH GENERAL DRIVEWAY REINFORCING. FULL LAP LENGTH REQUIRED (REFER TO SPECIFICATION SHEET)

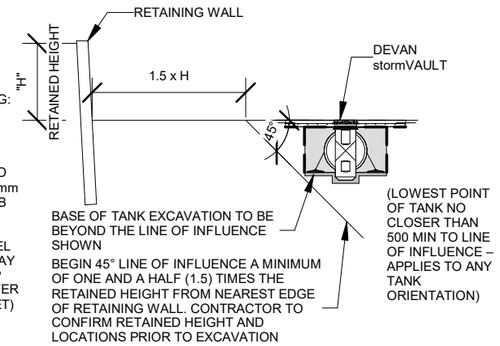


5 **TANK PLACEMENT NEAR RETAINING WALL**

SOIL CONDITIONS
SITE SOIL CONDITIONS ALLOW FOR EXPANSIVE SOIL UP TO AND INCLUDING CLASS M AS DEFINED IN AS2870, PROVIDED AN ULTIMATE BEARING CAPACITY OF 300 KPA IS ACHIEVABLE FOR THE SUBGRADE DIRECTLY SUPPORTING THE SLAB AND THE BASECOURSE. NO ALLOWANCE FOR LIQUIFIABLE SOIL, OR SOIL WITH SLOPE STABILITY ISSUES. IT IS THE RESPONSIBILITY OF THE CONTRACTOR AND THE OWNER TO VERIFY THE SITE CONDITIONS PRIOR TO COMMENCING THE CONSTRUCTION WORKS.

TANK LOCATION - PROXIMITY TO NEARBY STRUCTURES:
IT IS THE CONTRACTOR AND OWNER'S RESPONSIBILITY TO ENSURE THAT THE LOCATION OF THE TANK WITH RESPECT TO ADJACENT STRUCTURES COMPLY WITH THE LIMITS AND RESTRICTIONS SET OUT IN THESE DRAWINGS. DEVAN PLASTICS LTD SHALL BE NOTIFIED IMMEDIATELY IF THOSE LIMITS ARE NOT ACHIEVABLE.

BACKFILL AND BASECOURSE:
GAP 10 or GAP 20 SHALL BE USED FOR BACKFILL AND BASECOURSE MATERIAL. ALTERNATIVE MATERIAL SHALL NOT BE USED WITHOUT THE WRITTEN APPROVAL OF DEVAN PLASTICS LTD.

CONTRACTOR SHALL BACKFILL LIFTS OF 150MM. THE CONTRACTOR SHALL USE THE APPROPRIATE TOOLS AND CONSTRUCTION TECHNIQUES TO ENSURE ALL VOIDS ARE FILLED ALONG THE FULL LENGTH OF THE TANK, ENSURING SUFFICIENT SUPPORT.

BATTERING/BENCHING/SHORING:
MANAGING THE STABILITY OF THE TRENCH DURING EXCAVATION IS THE RESPONSIBILITY OF THE CONTRACTOR, AND SHALL BE CARRIED OUT WITH THE RELEVANT GUIDELINES AND BEST PRACTICES IN ACCORDANCE WITH THE HEALTH AND SAFETY AT WORK ACT 2015. THIS INCLUDES, BUT NOT LIMITED TO, ANY EXCAVATIONS DEEPER THAN 1.5M. THE CONTRACTOR SHALL CONSULT WITH SUITABLE INDUSTRY PROFESIONALS SHOULD FURTHER GUIDANCE BE REQUIRED FOR BENCHING, BATTERING, AND SHORING.

LOADING:
COMMERCIAL VEHICLES WITH MAX AXLE LOAD OF 120kN (NZTA HN LOADING)
CONTRACTOR AND TANK OWNER TO ENSURE TANK POSITION DOES NOT EXPOSE THE TANK TO LOADS GREATER THAN SPECIFIED IN THESE DRAWINGS FOR THE DESIGN LIFE OF THE UNIT.

NOTE:
THIS SHEET IS FOR THE INSTALLATION OF TANKS REQUIRING ANCHOR PADS AS DETERMINED THROUGH "DEVAN PLASTICS stormVAULT UNDERGROUND CYLINDRICAL TANKS TOOLBOX VERSION 1.0 (OR HIGHER) CALCULATOR". IT IS THE RESPONSIBILITY OF THE CONTRACTOR AND OWNER TO ENSURE CORRECT TANK INSTALLATION IN ACCORDANCE WITH THE DEVAN INSTALLATION GUIDES AND DRAWINGS.

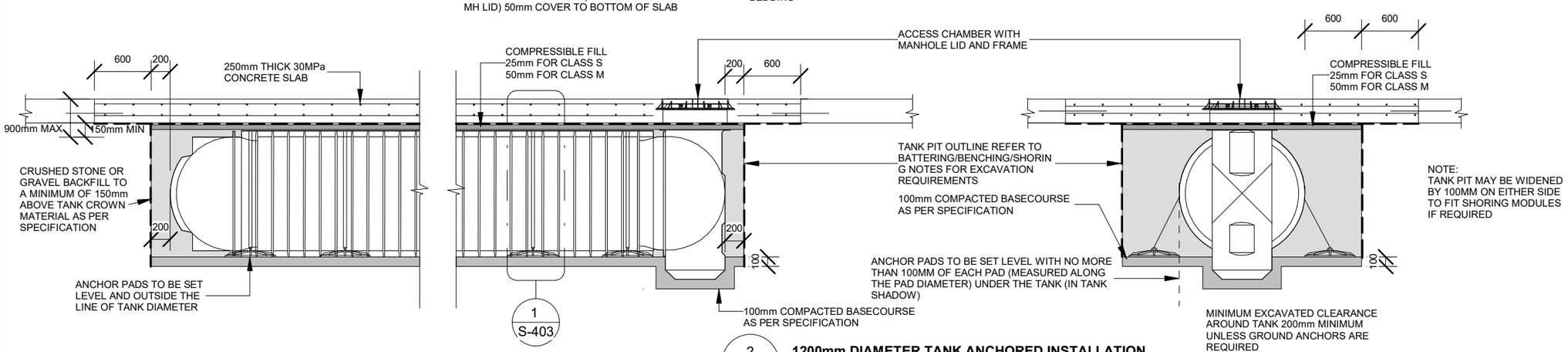


2 **1200mm DIAMETER TANK ANCHORED INSTALLATION**

| REV | ISSUE | Date |
|---|---|---|
| 1 | FOR CONSTRUCTION | 16.04.25 |
| 0 | FOR CONSTRUCTION | 01.11.24 |

| | |
|---|---|
| DESIGNED | SK |
| CHECKED | SK/RR |
| DRAWN | AS |

Contact SENZ when in doubt. Refer to Architectural Drawings for set out, do not scale Structural Engineering Drawings


Business Address: L1, 52 Highbrook Drive, East Tamaki, Auckland 2013
Phone Number: +64 9 275 6029
Evening Number: +64 9 889 9350
E-mail Address: info@structural-engs.co.nz
Website: www.structural-engs.co.nz


SENZ Structural Engineers New Zealand

CLIENT DEVAN

PROJECT
**DEVAN PLASTICS STANDARD DESIGN FOR UNDERGROUND TANKS**

SHEET TITLE
**HN COMMERCIAL TRAFFIC LOADING - SINGLE TANK INSTALLATION INSTRUCTIONS WITH ANCHORS - SLAB ON CLASS M EXPANSIVE SOIL**

FOR CONSTRUCTION

| SCALE | Drawing No. | REVISION |
|---|---|---|
| As indicated @ A3<br>1:A3x2 @ A1 | 059-003 -S-403 | 1 |

NOTE:
stormVAULT 800mm TANKS MAY BE DIRECTLY SUBSTITUTED WITH THE stormVAULT 1200mm TANKS, PROVIDED ALL DIMENSIONAL CONSTRAINTS IN THESE DRAWINGS ARE FOLLOWED.

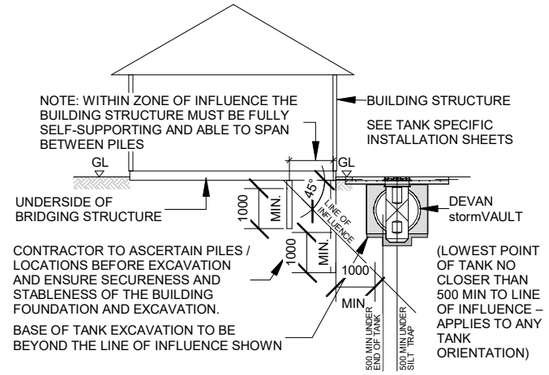


2 **TANK PLACEMENT NEAR PILED FOUNDATIONS**

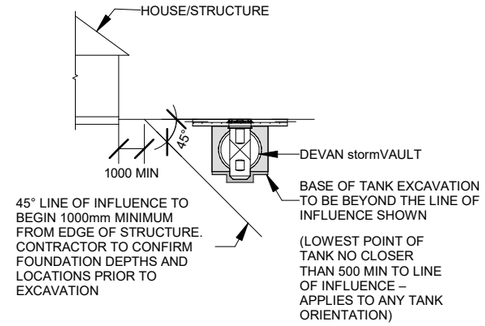


3 **TANK PLACEMENT NEAR BUILDING STRUCTURE**

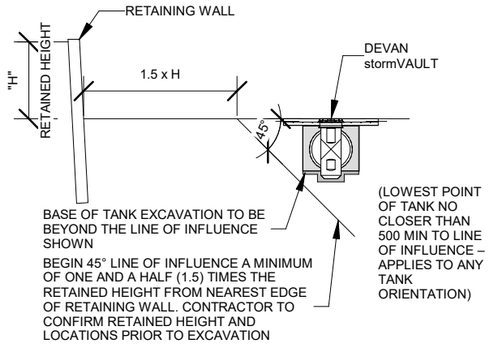


4 **TANK PLACEMENT NEAR RETAINING WALL**

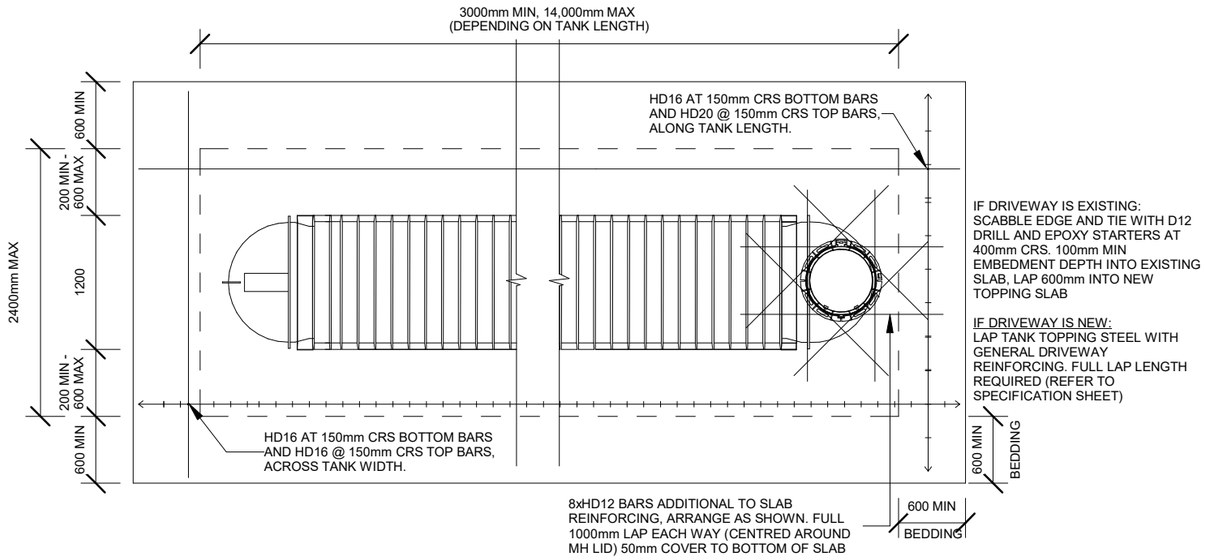


IF DRIVEWAY IS EXISTING:
SCABBLE EDGE AND TIE WITH D12 DRILL AND EPOXY STARTERS AT 400mm CRS. 100mm MIN EMBEDMENT DEPTH INTO EXISTING SLAB, LAP 600mm INTO NEW TOPPING SLAB

IF DRIVEWAY IS NEW:
LAP TANK TOPPING STEEL WITH GENERAL DRIVEWAY REINFORCING. FULL LAP LENGTH REQUIRED (REFER TO SPECIFICATION SHEET)

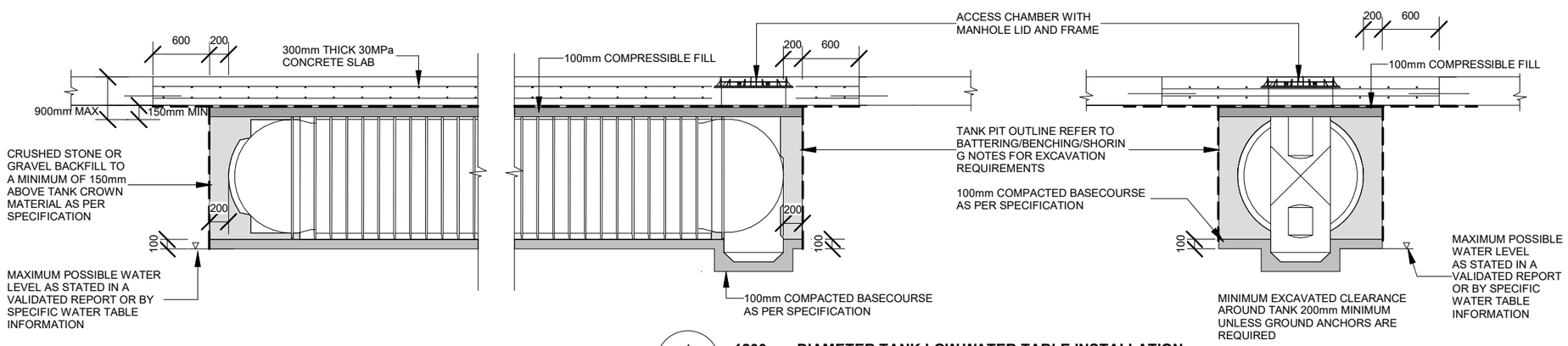


1 **1200mm DIAMETER TANK LOW WATER TABLE INSTALLATION**

NOTES:
- ALL DIMENSIONS IN MILLIMETRES UNO
- REFER TO STRUCTURAL SPECIFICATIONS SHEET OR CONCRETE REINFORCING & OTHER NOTES
- ALL LEVELS SHALL BE CONFIRMED BY THE CONTRACTOR PRIOR TO COMMENCEMENT OF WORK.
- ALL UNDERGROUND SERVICES SHALL BE CONFIRMED, LOCATED AND MARKED PRIOR TO ANY EXCAVATION WORKS,

- DEVAN PLASTICS LTD SHALL BE NOTIFIED IMMEDIATELY SHOULD ANY OF THE DESIGN PARAMETERS SHOWN ON THE DRAWINGS NOT BE ACHIEVABLE.

- REFER TO DEVAN PLASTICS LTD FOR MAXIMUM BURIAL DEPTH ALLOWANCES.

- TEMPORARY SUPPORT AND SHORING TO BE CARRIED OUT IN ACCORDANCE WITH WORKSAFE EXCAVATION SAFETY GUIDELINES.

- stormVAULT INSTALLATION TO BE CARRIED OUT IN CONJUCTION WITH DEVAN PRODUCT INFORMATION GUIDE AND THESE DRAWINGS

SOIL CONDITIONS
SITE SOIL CONDITIONS ALLOW FOR EXPANSIVE SOIL UP TO AND INCLUDING CLASS H2 AS DEFINED IN AS2870, PROVIDED AN ULTIMATE BEARING CAPACITY OF 300 KPA IS ACHIEVABLE FOR THE SUBGRADE DIRECTLY SUPPORTING THE SLAB AND THE BASECOURSE. NO ALLOWANCE FOR LIQUIFIABLE SOIL, OR SOIL WITH SLOPE STABILITY ISSUES. IT IS THE RESPONSIBILITY OF THE CONTRACTOR AND THE OWNER TO VERIFY THE SITE CONDITIONS PRIOR TO COMMENCING THE CONSTRUCTION WORKS.

TANK LOCATION - PROXIMITY TO NEARBY STRUCTURES:
IT IS THE CONTRACTOR AND OWNER'S RESPONSIBILITY TO ENSURE THAT THE LOCATION OF THE TANK WITH RESPECT TO ADJACENT STRUCTURES COMPLY WITH THE LIMITS AND RESTRICTIONS SET OUT IN THESE DRAWINGS. DEVAN PLASTICS LTD SHALL BE NOTIFIED IMMEDIATELY IF THOSE LIMITS ARE NOT ACHIEVABLE.

BACKFILL AND BASECOURSE:
GAP 10 or GAP 20 SHALL BE USED FOR BACKFILL AND BASECOURSE MATERIAL. ALTERNATIVE MATERIAL SHALL NOT BE USED WITHOUT THE WRITTEN APPROVAL OF DEVAN PLASTICS LTD.

CONTRACTOR SHALL BACKFILL LIFTS OF 150MM. THE CONTRACTOR SHALL USE THE APPROPRIATE TOOLS AND CONSTRUCTION TECHNIQUES TO ENSURE ALL VOIDS ARE FILLED ALONG THE FULL LENGTH OF THE TANK, ENSURING SUFFICIENT SUPPORT.

BATTERING/BENCHING/SHORING:
MANAGING THE STABILITY OF THE TRENCH DURING EXCAVATION IS THE RESPONSIBILITY OF THE CONTRACTOR, AND SHALL BE CARRIED OUT WITH THE RELEVANT GUIDELINES AND BEST PRACTICES IN ACCORDANCE WITH THE HEALTH AND SAFETY AT WORK ACT 2015. THIS INCLUDES, BUT NOT LIMITED TO, ANY EXCAVATIONS DEEPER THAN 1.5M. THE CONTRACTOR SHALL CONSULT WITH SUITABLE INDUSTRY PROFESIONALS SHOULD FURTHER GUIDANCE BE REQUIRED FOR BENCHING, BATTERING, AND SHORING.

LOADING:
COMMERCIAL VEHICLES WITH MAX AXLE LOAD OF 120kN (NZTA HN LOADING)
CONTRACTOR AND TANK OWNER TO ENSURE TANK POSITION DOES NOT EXPOSE THE TANK TO LOADS GREATER THAN SPECIFIED IN THESE DRAWINGS FOR THE DESIGN LIFE OF THE UNIT.

NOTE:
THIS SHEET IS FOR THE INSTALLATION OF TANKS ABOVE MAXIMUM POSSIBLE WATER TABLE LEVELS OR FOR INSTALLATIONS NOT REQUIRING ANCHOR PADS AS DETERMINED THROUGH "DEVAN PLASTICS stormVAULT UNDERGROUND CYLINDRICAL TANKS TOOLBOX VERSION 1.0 (OR HIGHER) CALCULATOR". IF TANKS ARE BEING INSTALLED ABOVE MAXIMUM POSSIBLE WATER TABLE LEVELS THEN SITE SPECIFIC REPORTS OR WATER TABLE INFORMATION MUST PROVE THE WATER LEVEL CAN NOT POSSIBLY RISE ABOVE THE BOTTOM OF THE EXCAVATION. IF THIS INFORMATION CAN NOT BE PROVIDED, REFER TO SHEET 059-003-S-405. IT IS THE RESPONSIBILITY OF THE CONTRACTOR AND OWNER TO ENSURE CORRECT TANK INSTALLATION IN ACCORDANCE WITH THE DEVAN INSTALLATION GUIDES AND DRAWINGS.

| REV | ISSUE | Date |
|---|---|---|
| 1 | FOR CONSTRUCTION | 16.04.25 |
| 0 | FOR CONSTRUCTION | 01.11.24 |

| | | |
|---|---|---|
| DESIGNED | SK | Contact SENZ when in doubt. Refer to Architectural Drawings for set out, do not scale Structural Engineering Drawings |
| CHECKED | SK/RR | Business Address: L1, 52 Highbrook Drive, East Tamaki, Auckland 2013 |
| DRAWN | AS | Phone Number: +64 9 275 6029<br>Evening Number: +64 9 889 9350<br>E-mail Address: info@structural-engs.co.nz<br>Website: www.structural-engs.co.nz |

SENZ Structural Engineers New Zealand

CLIENT DEVAN

PROJECT
**DEVAN PLASTICS STANDARD DESIGN FOR UNDERGROUND TANKS**

FOR CONSTRUCTION

SHEET TITLE
**HN COMMERCIAL TRAFFIC LOADING - SINGLE TANK INSTALLATION INSTRUCTIONS WITHOUT ANCHORS - SLAB ON CLASS H2 EXPANSIVE SOIL**

| SCALE | Drawing No. | REVISION |
|---|---|---|
| As indicated @ A3<br>1:A3x2 @ A1 | 059-003 -S-404 | 1 |

NOTE:
stormVAULT 800mm TANKS MAY BE DIRECTLY SUBSTITUTED WITH THE stormVAULT 1200mm TANKS, PROVIDED ALL DIMENSIONAL CONSTRAINTS IN THESE DRAWINGS ARE FOLLOWED.

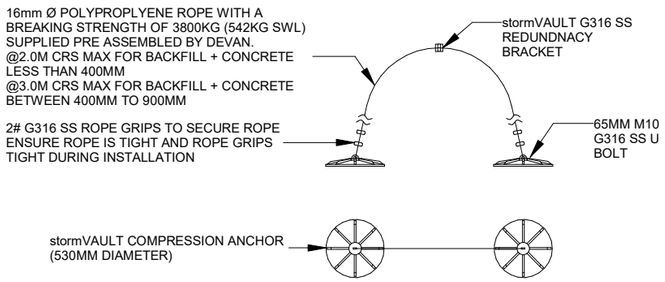


1 S-405 **DETAIL**

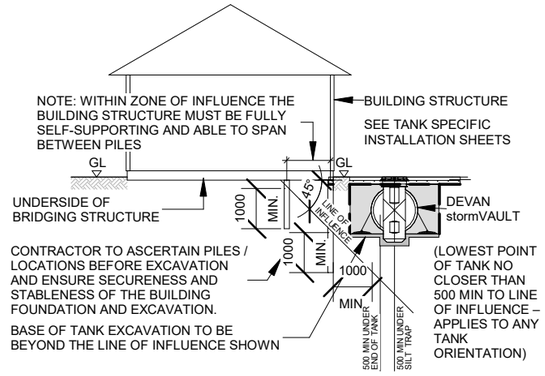


3 **TANK PLACEMENT NEAR PILED FOUNDATIONS**

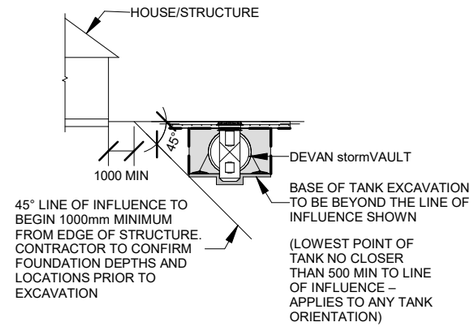


4 **TANK PLACEMENT NEAR BUILDING STRUCTURE**

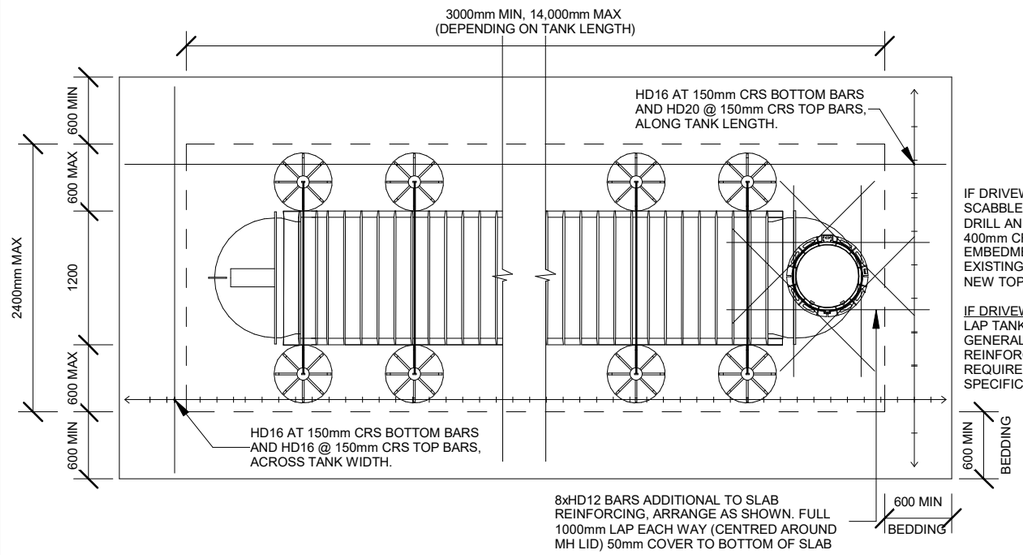


IF DRIVEWAY IS EXISTING:
SCABBLE EDGE AND TIE WITH D12 DRILL AND EPOXY STARTERS AT 400mm CRS. 100mm MIN EMBEDMENT DEPTH INTO EXISTING SLAB, LAP 600mm INTO NEW TOPPING SLAB

IF DRIVEWAY IS NEW:
LAP TANK TOPPING STEEL WITH GENERAL DRIVEWAY REINFORCING. FULL LAP LENGTH REQUIRED (REFER TO SPECIFICATION SHEET)

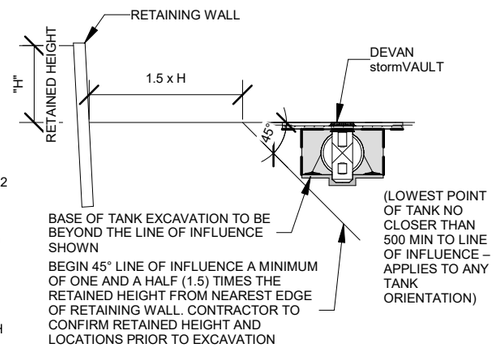


5 **TANK PLACEMENT NEAR RETAINING WALL**

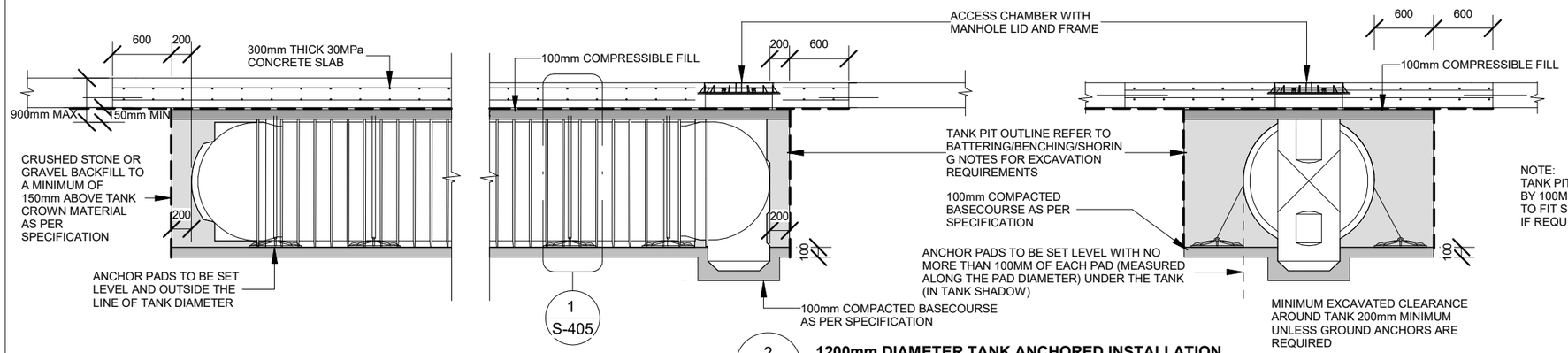


1 S-405

NOTE:
THIS SHEET IS FOR THE INSTALLATION OF TANKS REQUIRING ANCHOR PADS AS DETERMINED THROUGH "DEVAN PLASTICS stormVAULT UNDERGROUND CYLINDRICAL TANKS TOOLBOX VERSION 1.0 (OR HIGHER) CALCULATOR". IT IS THE RESPONSIBILITY OF THE CONTRACTOR AND OWNER TO ENSURE CORRECT TANK INSTALLATION IN ACCORDANCE WITH THE DEVAN INSTALLATION GUIDES AND DRAWINGS.

2 **1200mm DIAMETER TANK ANCHORED INSTALLATION**

NOTE:
TANK PIT MAY BE WIDENED BY 100MM ON EITHER SIDE TO FIT SHORING MODULES IF REQUIRED

NOTES:
- ALL DIMENSIONS IN MILLIMETRES UNO
- REFER TO STRUCTURAL SPECIFICATIONS SHEET OR CONCRETE REINFORCING & OTHER NOTES
- ALL LEVELS SHALL BE CONFIRMED BY THE CONTRACTOR PRIOR TO COMMENCEMENT OF WORK.
- ALL UNDERGROUND SERVICES SHALL BE CONFIRMED, LOCATED AND MARKED PRIOR TO ANY EXCAVATION WORKS,

- DEVAN PLASTICS LTD SHALL BE NOTIFIED IMMEDIATELY SHOULD ANY OF THE DESIGN PARAMETERS SHOWN ON THE DRAWINGS NOT BE ACHIEVABLE.

- REFER TO DEVAN PLASTICS LTD FOR MAXIMUM BURIAL DEPTH ALLOWANCES.

- TEMPORARY SUPPORT AND SHORING TO BE CARRIED OUT IN ACCORDANCE WITH WORKSAFE EXCAVATION SAFETY GUIDELINES.

- stormVAULT INSTALLATION TO BE CARRIED OUT IN CONJUCTION WITH DEVAN PRODUCT INFORMATION GUIDE AND THESE DRAWINGS

SOIL CONDITIONS
SITE SOIL CONDITIONS ALLOW FOR EXPANSIVE SOIL UP TO AND INCLUDING CLASS H2 AS DEFINED IN AS2870, PROVIDED AN ULTIMATE BEARING CAPACITY OF 300 KPA IS ACHIEVABLE FOR THE SUBGRADE DIRECTLY SUPPORTING THE SLAB AND THE BASECOURSE. NO ALLOWANCE FOR LIQUIFIABLE SOIL, OR SOIL WITH SLOPE STABILITY ISSUES. IT IS THE RESPONSIBILITY OF THE CONTRACTOR AND THE OWNER TO VERIFY THE SITE CONDITIONS PRIOR TO COMMENCING THE CONSTRUCTION WORKS.

TANK LOCATION - PROXIMITY TO NEARBY STRUCTURES:
IT IS THE CONTRACTOR AND OWNER'S RESPONSIBILITY TO ENSURE THAT THE LOCATION OF THE TANK WITH RESPECT TO ADJACENT STRUCTURES COMPLY WITH THE LIMITS AND RESTRICTIONS SET OUT IN THESE DRAWINGS. DEVAN PLASTICS LTD SHALL BE NOTIFIED IMMEDIATELY IF THOSE LIMITS ARE NOT ACHIEVABLE.

BACKFILL AND BASECOURSE:
GAP 10 or GAP 20 SHALL BE USED FOR BACKFILL AND BASECOURSE MATERIAL. ALTERNATIVE MATERIAL SHALL NOT BE USED WITHOUT THE WRITTEN APPROVAL OF DEVAN PLASTICS LTD.

CONTRACTOR SHALL BACKFILL LIFTS OF 150MM. THE CONTRACTOR SHALL USE THE APPROPRIATE TOOLS AND CONSTRUCTION TECHNIQUES TO ENSURE ALL VOIDS ARE FILLED ALONG THE FULL LENGTH OF THE TANK, ENSURING SUFFICIENT SUPPORT.

BATTERING/BENCHING/SHORING:
MANAGING THE STABILITY OF THE TRENCH DURING EXCAVATION IS THE RESPONSIBILITY OF THE CONTRACTOR, AND SHALL BE CARRIED OUT WITH THE RELEVANT GUIDELINES AND BEST PRACTICES IN ACCORDANCE WITH THE HEALTH AND SAFETY AT WORK ACT 2015. THIS INCLUDES, BUT NOT LIMITED TO, ANY EXCAVATIONS DEEPER THAN 1.5M. THE CONTRACTOR SHALL CONSULT WITH SUITABLE INDUSTRY PROFESIONALS SHOULD FURTHER GUIDANCE BE REQUIRED FOR BENCHING, BATTERING, AND SHORING.

LOADING:
COMMERCIAL VEHICLES WITH MAX AXLE LOAD OF 120kN (NZTA HN LOADING)
CONTRACTOR AND TANK OWNER TO ENSURE TANK POSITION DOES NOT EXPOSE THE TANK TO LOADS GREATER THAN SPECIFIED IN THESE DRAWINGS FOR THE DESIGN LIFE OF THE UNIT.

| REV | ISSUE | Date |
|---|---|---|
| 1 | FOR CONSTRUCTION | 16.04.25 |
| 0 | FOR CONSTRUCTION | 01.11.24 |

| | | |
|---|---|---|
| DESIGNED | SK | Contact SENZ when in doubt. Refer to Architectural Drawings for set out, do not scale Structural Engineering Drawings |
| CHECKED | SK/RR | Business Address: L1, 52 Highbrook Drive, East Tamaki, Auckland 2013 |
| DRAWN | AS | Phone Number: +64 9 275 6029<br>Evening Number: +64 9 889 9350<br>E-mail Address: info@structural-engs.co.nz<br>Website: www.structural-engs.co.nz |

SENZ Structural Engineers New Zealand

CLIENT DEVAN

PROJECT
**DEVAN PLASTICS STANDARD DESIGN FOR UNDERGROUND TANKS**

SHEET TITLE
**HN COMMERCIAL TRAFFIC LOADING - SINGLE TANK INSTALLATION INSTRUCTIONS WITH ANCHORS - SLAB ON CLASS H2 EXPANSIVE SOIL**

FOR CONSTRUCTION

| SCALE | Drawing No. | REVISION |
|---|---|---|
| As indicated @ A3<br>1:A3x2 @ A1 | 059-003 -S-405 | 1 |

NOTE:
stormVAULT 800mm TANKS MAY BE DIRECTLY SUBSTITUTED WITH THE stormVAULT 1200mm TANKS, PROVIDED ALL DIMENSIONAL CONSTRAINTS IN THESE DRAWINGS ARE FOLLOWED.

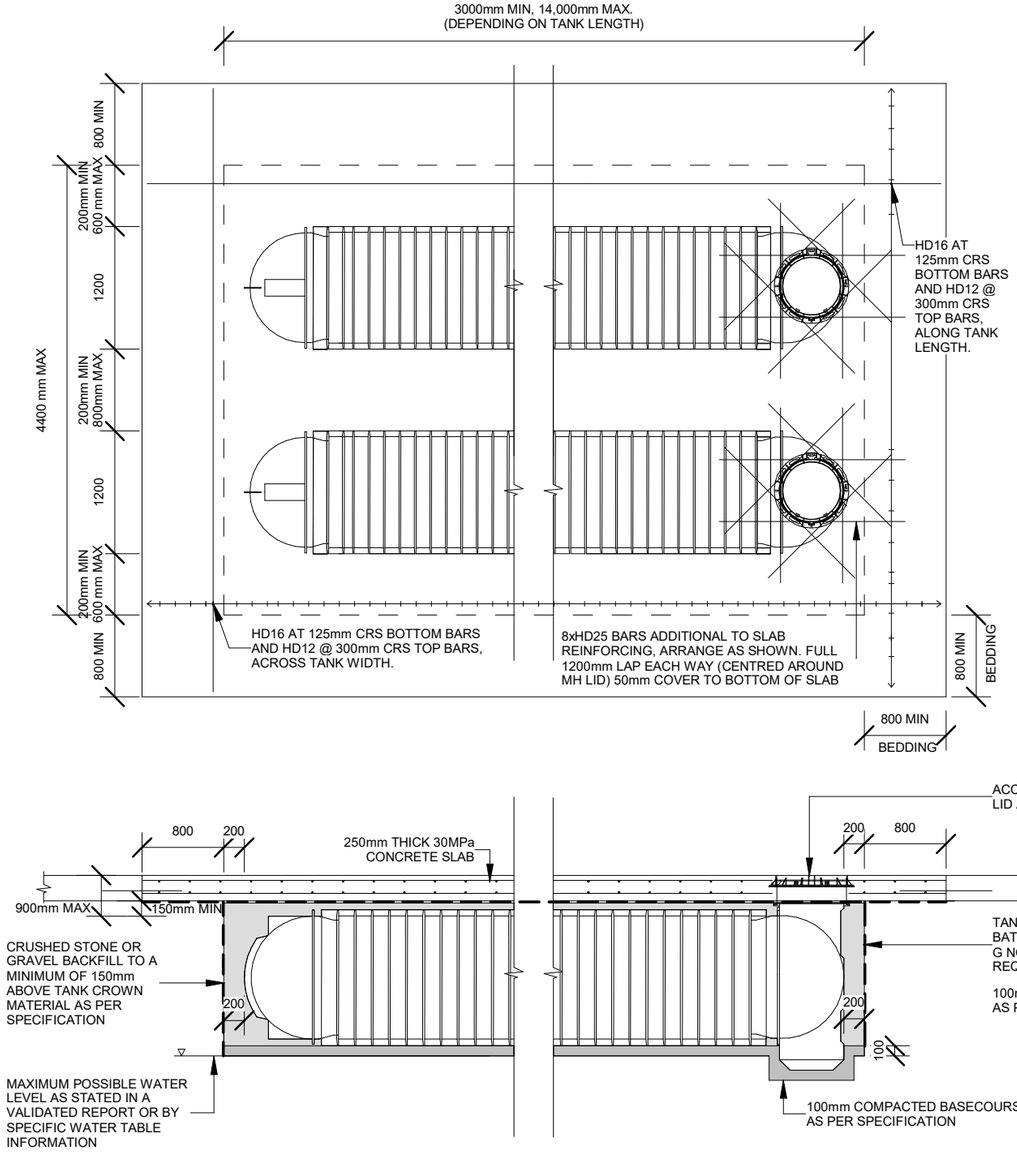


1 **1200mm DIAMETER TANK SIDE BY SIDE INSTALLATION**

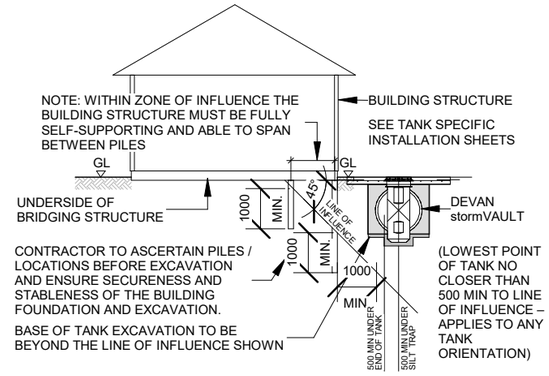


2 **TANK PLACEMENT NEAR PILED FOUNDATIONS**

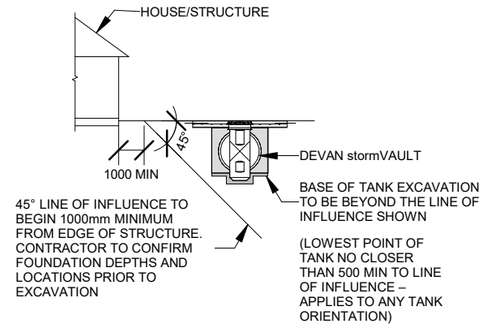


3 **TANK PLACEMENT NEAR BUILDING STRUCTURE**

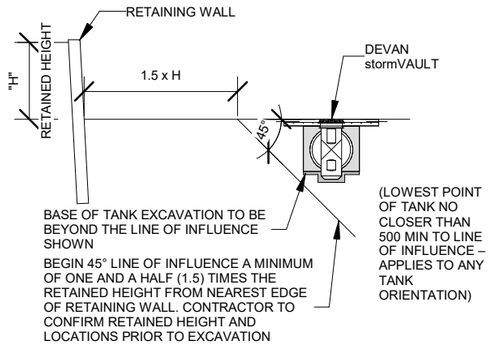


4 **TANK PLACEMENT NEAR RETAINING WALL**

NOTES:
- ALL DIMENSIONS IN MILLIMETRES UNO
- REFER TO STRUCTURAL SPECIFICATIONS SHEET OR CONCRETE REINFORCING & OTHER NOTES
- ALL LEVELS SHALL BE CONFIRMED BY THE CONTRACTOR PRIOR TO COMMENCEMENT OF WORK.
- ALL UNDERGROUND SERVICES SHALL BE CONFIRMED, LOCATED AND MARKED PRIOR TO ANY EXCAVATION WORKS,

- DEVAN PLASTICS LTD SHALL BE NOTIFIED IMMEDIATELY SHOULD ANY OF THE DESIGN PARAMETERS SHOWN ON THE DRAWINGS NOT BE ACHIEVABLE.

- REFER TO DEVAN PLASTICS LTD FOR MAXIMUM BURIAL DEPTH ALLOWANCES.

- TEMPORARY SUPPORT AND SHORING TO BE CARRIED OUT IN ACCORDANCE WITH WORKSAFE EXCAVATION SAFETY GUIDELINES.

- stormVAULT INSTALLATION TO BE CARRIED OUT IN CONJUCTION WITH DEVAN PRODUCT INFORMATION GUIDE AND THESE DRAWINGS

SOIL CONDITIONS
SITE SOIL CONDITIONS ARE CONSISTENT WITH "GOOD GROUND" AS DEFINED IN NZS3604:2011. i.e. NO ALLOWANCE FOR EXPANSIVE OR LIQUIFIABLE SOIL, OR SOIL WITH SLOPE STABILITY ISSUES. IT IS THE RESPONSIBILITY OF THE CONTRACTOR AND THE OWNER TO VERIFY THE SITE CONDITIONS PRIOR TO COMMENCING THE CONSTRUCTION WORKS.

TANK LOCATION - PROXIMITY TO NEARBY STRUCTURES:
IT IS THE CONTRACTOR AND OWNER'S RESPONSIBILITY TO ENSURE THAT THE LOCATION OF THE TANK WITH RESPECT TO ADJACENT STRUCTURES COMPLY WITH THE LIMITS AND RESTRICTIONS SET OUT IN THESE DRAWINGS. DEVAN PLASTICS LTD SHALL BE NOTIFIED IMMEDIATELY IF THOSE LIMITS ARE NOT ACHIEVABLE.

BACKFILL AND BASECOURSE:
GAP 10 or GAP 20 SHALL BE USED FOR BACKFILL AND BASECOURSE MATERIAL. ALTERNATIVE MATERIAL SHALL NOT BE USED WITHOUT THE WRITTEN APPROVAL OF DEVAN PLASTICS LTD.

CONTRACTOR SHALL BACKFILL LIFTS OF 150MM. THE CONTRACTOR SHALL USE THE APPROPRIATE TOOLS AND CONSTRUCTION TECHNIQUES TO ENSURE ALL VOIDS ARE FILLED ALONG THE FULL LENGTH OF THE TANK, ENSURING SUFFICIENT SUPPORT.

BATTERING/BENCHING/SHORING:
MANAGING THE STABILITY OF THE TRENCH DURING EXCAVATION IS THE RESPONSIBILITY OF THE CONTRACTOR, AND SHALL BE CARRIED OUT WITH THE RELEVANT GUIDELINES AND BEST PRACTICES IN ACCORDANCE WITH THE HEALTH AND SAFETY AT WORK ACT 2015. THIS INCLUDES, BUT NOT LIMITED TO, ANY EXCAVATIONS DEEPER THAN 1.5M. THE CONTRACTOR SHALL CONSULT WITH SUITABLE INDUSTRY PROFESIONALS SHOULD FURTHER GUIDANCE BE REQUIRED FOR BENCHING, BATTERING, AND SHORING.

LOADING:
COMMERCIAL VEHICLES WITH MAX AXLE LOAD OF 120kN (NZTA HN LOADING)
CONTRACTOR AND TANK OWNER TO ENSURE TANK POSITION DOES NOT EXPOSE THE TANK TO LOADS GREATER THAN SPECIFIED IN THESE DRAWINGS FOR THE DESIGN LIFE OF THE UNIT.

NOTE:
THIS SHEET IS FOR THE INSTALLATION OF TANKS ABOVE MAXIMUM POSSIBLE WATER TABLE LEVELS OR FOR INSTALLATIONS NOT REQUIRING ANCHOR PADS AS DETERMINED THROUGH "DEVAN PLASTICS stormVAULT UNDERGROUND CYLINDRICAL TANKS TOOLBOX VERSION 1.0 (OR HIGHER) CALCULATOR". IF TANKS ARE BEING INSTALLED ABOVE MAXIMUM POSSIBLE WATER TABLE LEVELS THEN SITE SPECIFIC REPORTS OR WATER TABLE INFORMATION MUST PROVE THE WATER LEVEL CAN NOT POSSIBLY RISE ABOVE THE BOTTOM OF THE EXCAVATION. IF THIS INFORMATION CAN NOT BE PROVIDED, REFER TO SHEET 059-003-S-501. IT IS THE RESPONSIBILITY OF THE CONTRACTOR AND OWNER TO ENSURE CORRECT TANK INSTALLATION IN ACCORDANCE WITH THE DEVAN INSTALLATION GUIDES AND DRAWINGS.

| REV | ISSUE | Date |
|---|---|---|
| 1 | FOR CONSTRUCTION | 16.04.25 |
| 0 | FOR CONSTRUCTION | 01.11.24 |

| | | |
|---|---|---|
| DESIGNED | SK | Contact SENZ when in doubt. Refer to Architectural Drawings for set out, do not scale Structural Engineering Drawings |
| CHECKED | SK/RR | Business Address: L1, 52 Highbrook Drive, East Tamaki, Auckland 2013 |
| DRAWN | AS | Phone Number: +64 9 275 6029<br>Evening Number: +64 9 889 9350<br>E-mail Address: info@structural-engs.co.nz<br>Website: www.structural-engs.co.nz |

SENZ Structural Engineers New Zealand

CLIENT DEVAN

PROJECT
**DEVAN PLASTICS STANDARD DESIGN FOR UNDERGROUND TANKS**

SHEET TITLE
**HN COMMERCIAL TRAFFIC LOADING - DOUBLE TANK INSTALLATION INSTRUCTIONS WITHOUT ANCHORS - SLAB ON GOOD GROUND**

FOR CONSTRUCTION

| SCALE | Drawing No. | REVISION |
|---|---|---|
| As indicated @ A3<br>1:A3x2 @ A1 | 059-003 -S-500 | 1 |

NOTE:
stormVAULT 800mm TANKS MAY BE DIRECTLY SUBSTITUTED WITH THE stormVAULT 1200mm TANKS, PROVIDED ALL DIMENSIONAL CONSTRAINTS IN THESE DRAWINGS ARE FOLLOWED.

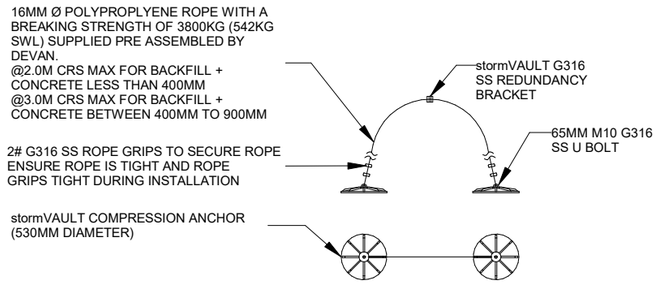


1 S-501 **DETAIL**

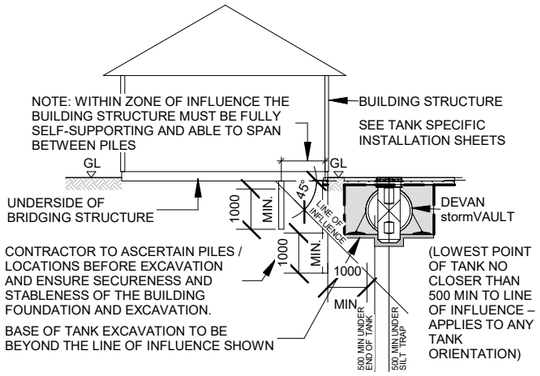


3 **TANK PLACEMENT NEAR PILED FOUNDATIONS**

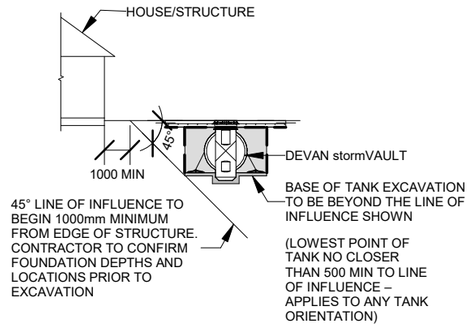


4 **TANK PLACEMENT NEAR BUILDING STRUCTURE**

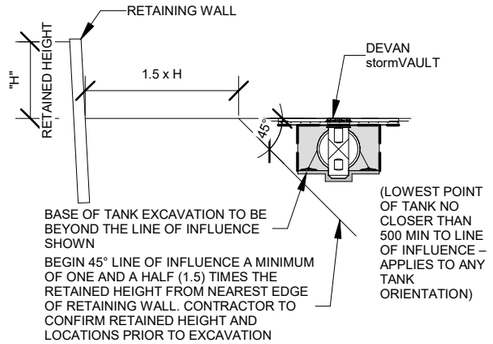


5 **TANK PLACEMENT NEAR RETAINING WALL**

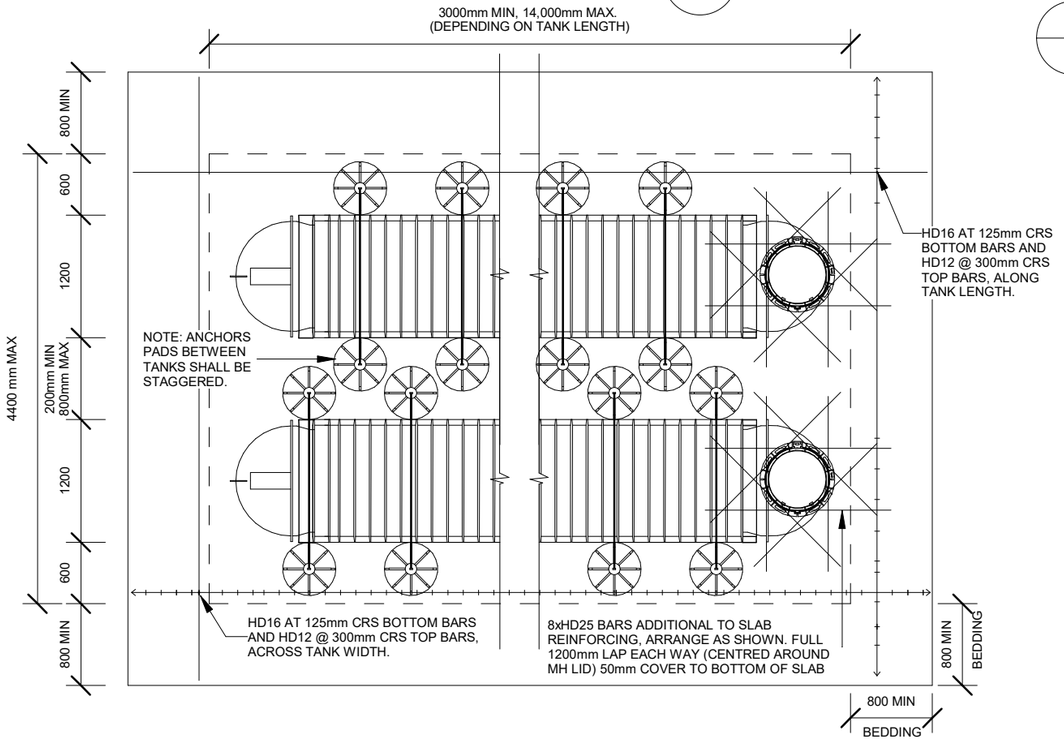


IF DRIVEWAY IS EXISTING:
SCABBLE EDGE AND TIE WITH D12 DRILL AND EPOXY STARTERS AT 400mm CRS. 100mm MIN EMBEDMENT DEPTH INTO EXISTING SLAB, LAP 600mm INTO NEW TOPPING SLAB

IF DRIVEWAY IS NEW:
LAP TANK TOPPING STEEL WITH GENERAL DRIVEWAY REINFORCING. FULL LAP LENGTH REQUIRED (REFER TO SPECIFICATION SHEET)

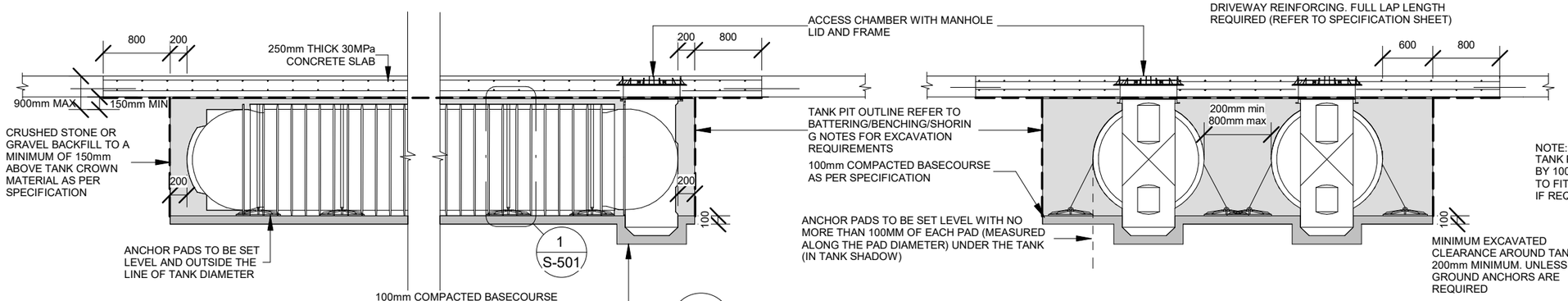


2 **1200mm DIAMETER TANK SIDE BY SIDE ANCHORED INSTALLATION**

NOTES:
- ALL DIMENSIONS IN MILLIMETRES UNO
- REFER TO STRUCTURAL SPECIFICATIONS SHEET OR CONCRETE REINFORCING & OTHER NOTES
- ALL LEVELS SHALL BE CONFIRMED BY THE CONTRACTOR PRIOR TO COMMENCEMENT OF WORK.
- ALL UNDERGROUND SERVICES SHALL BE CONFIRMED, LOCATED AND MARKED PRIOR TO ANY EXCAVATION WORKS,

- DEVAN PLASTICS LTD SHALL BE NOTIFIED IMMEDIATELY SHOULD ANY OF THE DESIGN PARAMETERS SHOWN ON THE DRAWINGS NOT BE ACHIEVABLE.

- REFER TO DEVAN PLASTICS LTD FOR MAXIMUM BURIAL DEPTH ALLOWANCES.

- TEMPORARY SUPPORT AND SHORING TO BE CARRIED OUT IN ACCORDANCE WITH WORKSAFE EXCAVATION SAFETY GUIDELINES.

- stormVAULT INSTALLATION TO BE CARRIED OUT IN CONJUCTION WITH DEVAN PRODUCT INFORMATION GUIDE AND THESE DRAWINGS

SOIL CONDITIONS
SITE SOIL CONDITIONS ARE CONSISTENT WITH "GOOD GROUND" AS DEFINED IN NZS3604:2011. i.e. NO ALLOWANCE FOR EXPANSIVE OR LIQUIFIABLE SOIL, OR SOIL WITH SLOPE STABILITY ISSUES. IT IS THE RESPONSIBILITY OF THE CONTRACTOR AND THE OWNER TO VERIFY THE SITE CONDITIONS PRIOR TO COMMENCING THE CONSTRUCTION WORKS.

TANK LOCATION - PROXIMITY TO NEARBY STRUCTURES:
IT IS THE CONTRACTOR AND OWNER'S RESPONSIBILITY TO ENSURE THAT THE LOCATION OF THE TANK WITH RESPECT TO ADJACENT STRUCTURES COMPLY WITH THE LIMITS AND RESTRICTIONS SET OUT IN THESE DRAWINGS. DEVAN PLASTICS LTD SHALL BE NOTIFIED IMMEDIATELY IF THOSE LIMITS ARE NOT ACHIEVABLE.

BACKFILL AND BASECOURSE:
GAP 10 or GAP 20 SHALL BE USED FOR BACKFILL AND BASECOURSE MATERIAL. ALTERNATIVE MATERIAL SHALL NOT BE USED WITHOUT THE WRITTEN APPROVAL OF DEVAN PLASTICS LTD.

CONTRACTOR SHALL BACKFILL LIFTS OF 150MM. THE CONTRACTOR SHALL USE THE APPROPRIATE TOOLS AND CONSTRUCTION TECHNIQUES TO ENSURE ALL VOIDS ARE FILLED ALONG THE FULL LENGTH OF THE TANK, ENSURING SUFFICIENT SUPPORT.

BATTERING/BENCHING/SHORING:
MANAGING THE STABILITY OF THE TRENCH DURING EXCAVATION IS THE RESPONSIBILITY OF THE CONTRACTOR, AND SHALL BE CARRIED OUT WITH THE RELEVANT GUIDELINES AND BEST PRACTICES IN ACCORDANCE WITH THE HEALTH AND SAFETY AT WORK ACT 2015. THIS INCLUDES, BUT NOT LIMITED TO, ANY EXCAVATIONS DEEPER THAN 1.5M. THE CONTRACTOR SHALL CONSULT WITH SUITABLE INDUSTRY PROFESIONALS SHOULD FURTHER GUIDANCE BE REQUIRED FOR BENCHING, BATTERING, AND SHORING.

LOADING:
COMMERCIAL VEHICLES WITH MAX AXLE LOAD OF 120kN (NZTA HN LOADING)
CONTRACTOR AND TANK OWNER TO ENSURE TANK POSITION DOES NOT EXPOSE THE TANK TO LOADS GREATER THAN SPECIFIED IN THESE DRAWINGS FOR THE DESIGN LIFE OF THE UNIT.

NOTE:
THIS SHEET IS FOR THE INSTALLATION OF TANKS REQUIRING ANCHOR PADS AS DETERMINED THROUGH "DEVAN PLASTICS stormVAULT UNDERGROUND CYLINDRICAL TANKS TOOLBOX VERSION 1.0 (OR HIGHER) CALCULATOR". IT IS THE RESPONSIBILITY OF THE CONTRACTOR AND OWNER TO ENSURE CORRECT TANK INSTALLATION IN ACCORDANCE WITH THE DEVAN INSTALLATION GUIDES AND DRAWINGS.

| REV | ISSUE | Date |
|---|---|---|
| 1 | FOR CONSTRUCTION | 16.04.25 |
| 0 | FOR CONSTRUCTION | 01.11.24 |

| | | |
|---|---|---|
| DESIGNED | SK | Contact SENZ when in doubt. Refer to Architectural Drawings for set out, do not scale Structural Engineering Drawings |
| CHECKED | SK/RR | Business Address: L1, 52 Highbrook Drive, East Tamaki, Auckland 2013 |
| DRAWN | AS | Phone Number: +64 9 275 6029<br>Evening Number: +64 9 889 9350<br>E-mail Address: info@structural-engs.co.nz<br>Website: www.structural-engs.co.nz |

SENZ Structural Engineers New Zealand

CLIENT DEVAN

PROJECT
**DEVAN PLASTICS STANDARD DESIGN FOR UNDERGROUND TANKS**

SHEET TITLE
**HN COMMERCIAL TRAFFIC LOADING - DOUBLE TANK INSTALLATION INSTRUCTIONS WITH ANCHORS - SLAB ON GOOD GROUND**

FOR CONSTRUCTION

| SCALE | Drawing No. | REVISION |
|---|---|---|
| As indicated @ A3<br>1:A3x2 @ A1 | 059-003 -S-501 | 1 |

NOTE:
stormVAULT 800mm TANKS MAY BE DIRECTLY SUBSTITUTED WITH THE stormVAULT 1200mm TANKS, PROVIDED ALL DIMENSIONAL CONSTRAINTS IN THESE DRAWINGS ARE FOLLOWED.

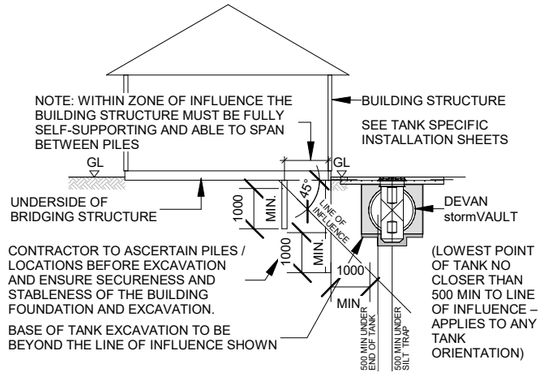


2 **TANK PLACEMENT NEAR PILED FOUNDATIONS**

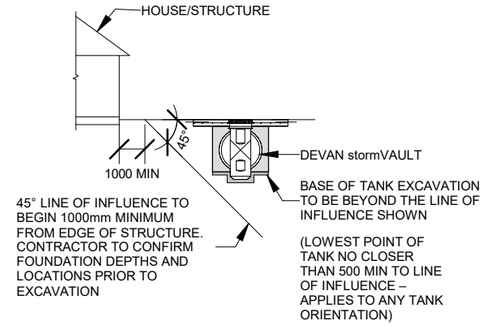


3 **TANK PLACEMENT NEAR BUILDING STRUCTURE**

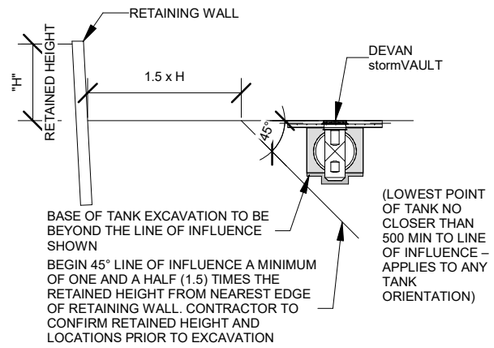


4 **TANK PLACEMENT NEAR RETAINING WALL**

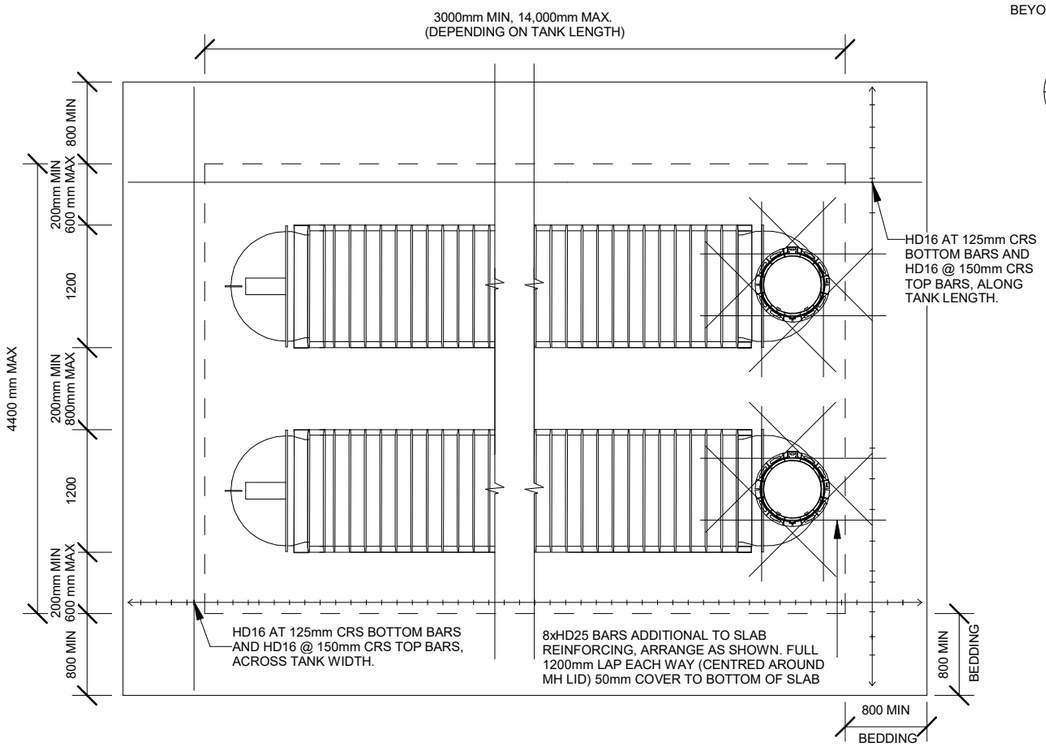


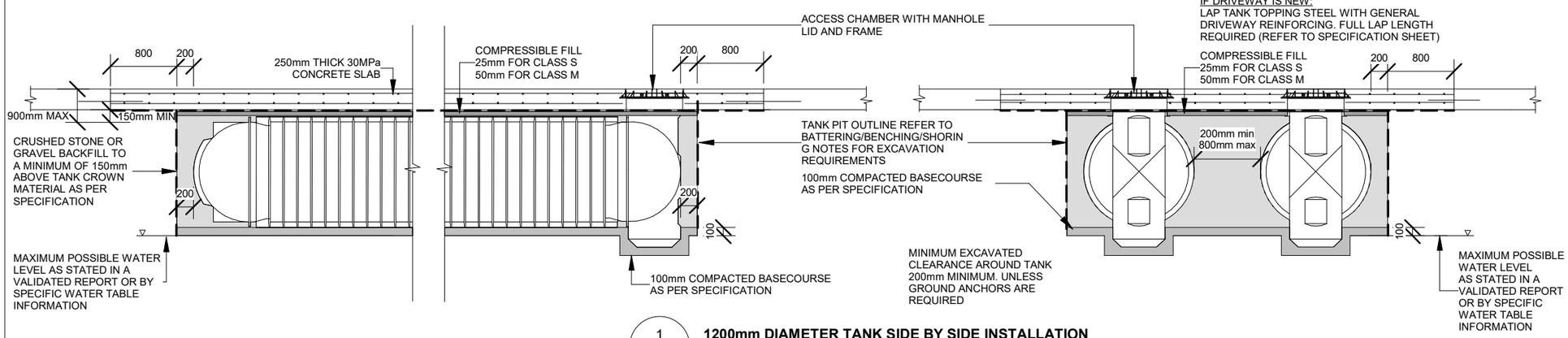


1 **1200mm DIAMETER TANK SIDE BY SIDE INSTALLATION**

NOTES:
- ALL DIMENSIONS IN MILLIMETRES UNO
- REFER TO STRUCTURAL SPECIFICATIONS SHEET OR CONCRETE REINFORCING & OTHER NOTES
- ALL LEVELS SHALL BE CONFIRMED BY THE CONTRACTOR PRIOR TO COMMENCEMENT OF WORK.
- ALL UNDERGROUND SERVICES SHALL BE CONFIRMED, LOCATED AND MARKED PRIOR TO ANY EXCAVATION WORKS,

- DEVAN PLASTICS LTD SHALL BE NOTIFIED IMMEDIATELY SHOULD ANY OF THE DESIGN PARAMETERS SHOWN ON THE DRAWINGS NOT BE ACHIEVABLE.

- REFER TO DEVAN PLASTICS LTD FOR MAXIMUM BURIAL DEPTH ALLOWANCES.

- TEMPORARY SUPPORT AND SHORING TO BE CARRIED OUT IN ACCORDANCE WITH WORKSAFE EXCAVATION SAFETY GUIDELINES.

- stormVAULT INSTALLATION TO BE CARRIED OUT IN CONJUCTION WITH DEVAN PRODUCT INFORMATION GUIDE AND THESE DRAWINGS

SOIL CONDITIONS
SITE SOIL CONDITIONS ALLOW FOR EXPANSIVE SOIL UP TO AND INCLUDING CLASS M AS DEFINED IN AS2870, PROVIDED AN ULTIMATE BEARING CAPACITY OF 300 KPA IS ACHIEVABLE FOR THE SUBGRADE DIRECTLY SUPPORTING THE SLAB AND THE BASECOURSE. NO ALLOWANCE FOR LIQUIFIABLE SOIL, OR SOIL WITH SLOPE STABILITY ISSUES. IT IS THE RESPONSIBILITY OF THE CONTRACTOR AND THE OWNER TO VERIFY THE SITE CONDITIONS PRIOR TO COMMENCING THE CONSTRUCTION WORKS.

TANK LOCATION - PROXIMITY TO NEARBY STRUCTURES:
IT IS THE CONTRACTOR AND OWNER'S RESPONSIBILITY TO ENSURE THAT THE LOCATION OF THE TANK WITH RESPECT TO ADJACENT STRUCTURES COMPLY WITH THE LIMITS AND RESTRICTIONS SET OUT IN THESE DRAWINGS. DEVAN PLASTICS LTD SHALL BE NOTIFIED IMMEDIATELY IF THOSE LIMITS ARE NOT ACHIEVABLE.

BACKFILL AND BASECOURSE:
GAP 10 or GAP 20 SHALL BE USED FOR BACKFILL AND BASECOURSE MATERIAL. ALTERNATIVE MATERIAL SHALL NOT BE USED WITHOUT THE WRITTEN APPROVAL OF DEVAN PLASTICS LTD.

CONTRACTOR SHALL BACKFILL LIFTS OF 150MM. THE CONTRACTOR SHALL USE THE APPROPRIATE TOOLS AND CONSTRUCTION TECHNIQUES TO ENSURE ALL VOIDS ARE FILLED ALONG THE FULL LENGTH OF THE TANK, ENSURING SUFFICIENT SUPPORT.

BATTERING/BENCHING/SHORING:
MANAGING THE STABILITY OF THE TRENCH DURING EXCAVATION IS THE RESPONSIBILITY OF THE CONTRACTOR, AND SHALL BE CARRIED OUT WITH THE RELEVANT GUIDELINES AND BEST PRACTICES IN ACCORDANCE WITH THE HEALTH AND SAFETY AT WORK ACT 2015. THIS INCLUDES, BUT NOT LIMITED TO, ANY EXCAVATIONS DEEPER THAN 1.5M. THE CONTRACTOR SHALL CONSULT WITH SUITABLE INDUSTRY PROFESIONALS SHOULD FURTHER GUIDANCE BE REQUIRED FOR BENCHING, BATTERING, AND SHORING.

LOADING:
COMMERCIAL VEHICLES WITH MAX AXLE LOAD OF 120kN (NZTA HN LOADING)
CONTRACTOR AND TANK OWNER TO ENSURE TANK POSITION DOES NOT EXPOSE THE TANK TO LOADS GREATER THAN SPECIFIED IN THESE DRAWINGS FOR THE DESIGN LIFE OF THE UNIT.

NOTE:
THIS SHEET IS FOR THE INSTALLATION OF TANKS ABOVE MAXIMUM POSSIBLE WATER TABLE LEVELS OR FOR INSTALLATIONS NOT REQUIRING ANCHOR PADS AS DETERMINED THROUGH "DEVAN PLASTICS stormVAULT UNDERGROUND CYLINDRICAL TANKS TOOLBOX VERSION 1.0 (OR HIGHER) CALCULATOR". IF TANKS ARE BEING INSTALLED ABOVE MAXIMUM POSSIBLE WATER TABLE LEVELS THEN SITE SPECIFIC REPORTS OR WATER TABLE INFORMATION MUST PROVE THE WATER LEVEL CAN NOT POSSIBLY RISE ABOVE THE BOTTOM OF THE EXCAVATION. IF THIS INFORMATION CAN NOT BE PROVIDED, REFER TO SHEET 059-003-S-503. IT IS THE RESPONSIBILITY OF THE CONTRACTOR AND OWNER TO ENSURE CORRECT TANK INSTALLATION IN ACCORDANCE WITH THE DEVAN INSTALLATION GUIDES AND DRAWINGS.

| REV | ISSUE | Date |
|---|---|---|
| 1 | FOR CONSTRUCTION | 16.04.25 |
| 0 | FOR CONSTRUCTION | 01.11.24 |

| | | |
|---|---|---|
| DESIGNED | SK | Contact SENZ when in doubt. Refer to Architectural Drawings for set out, do not scale Structural Engineering Drawings |
| CHECKED | SK/RR | Business Address: L1, 52 Highbrook Drive, East Tamaki, Auckland 2013 |
| DRAWN | AS | Phone Number: +64 9 275 6029<br>Evening Number: +64 9 889 9350<br>E-mail Address: info@structural-engs.co.nz<br>Website: www.structural-engs.co.nz |

SENZ Structural Engineers New Zealand

CLIENT DEVAN

PROJECT
**DEVAN PLASTICS STANDARD DESIGN FOR UNDERGROUND TANKS**

SHEET TITLE
**HN COMMERCIAL TRAFFIC LOADING - DOUBLE TANK INSTALLATION INSTRUCTIONS WITHOUT ANCHORS - SLAB ON CLASS M EXPANSIVE SOIL**

FOR CONSTRUCTION

| SCALE | Drawing No. | REVISION |
|---|---|---|
| As indicated @ A3<br>1:A3x2 @ A1 | 059-003 -S-502 | 1 |

NOTE:
stormVAULT 800mm TANKS MAY BE DIRECTLY SUBSTITUTED WITH THE stormVAULT 1200mm TANKS, PROVIDED ALL DIMENSIONAL CONSTRAINTS IN THESE DRAWINGS ARE FOLLOWED.

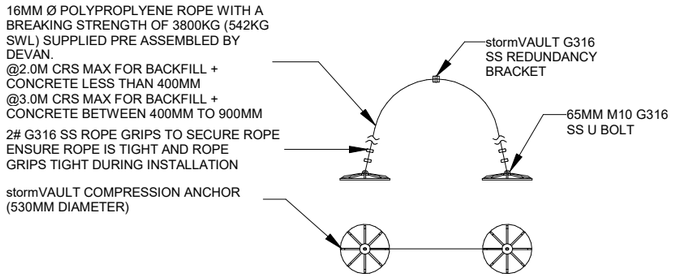


1 S-503 **DETAIL**

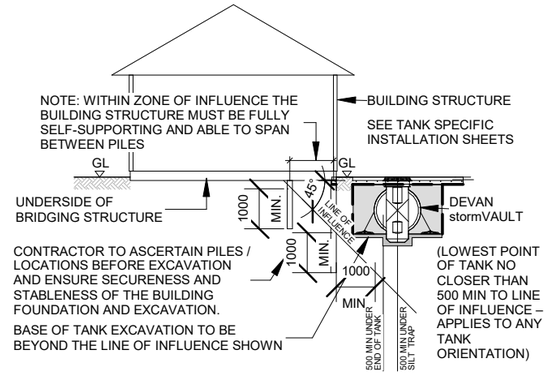


3 **TANK PLACEMENT NEAR PILED FOUNDATIONS**

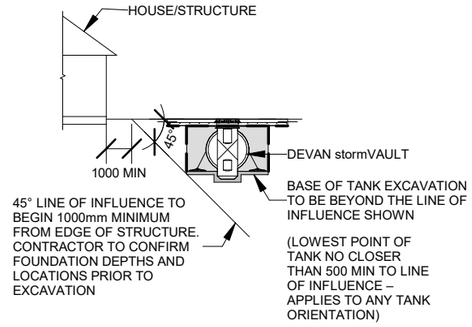


4 **TANK PLACEMENT NEAR BUILDING STRUCTURE**

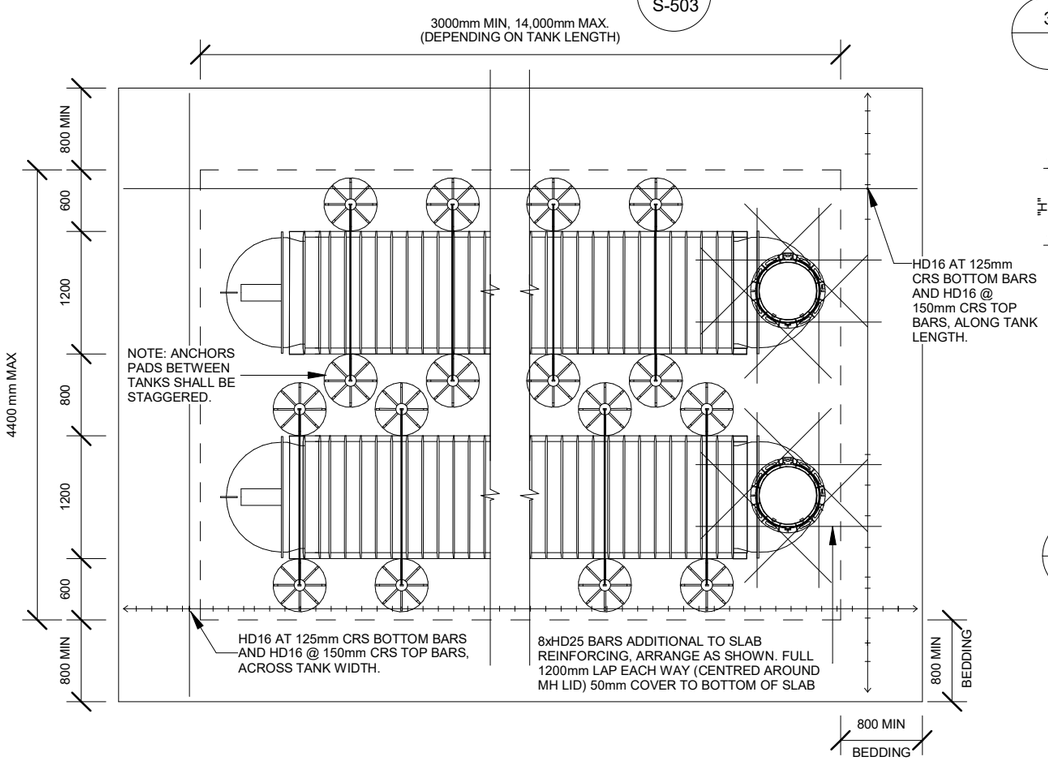


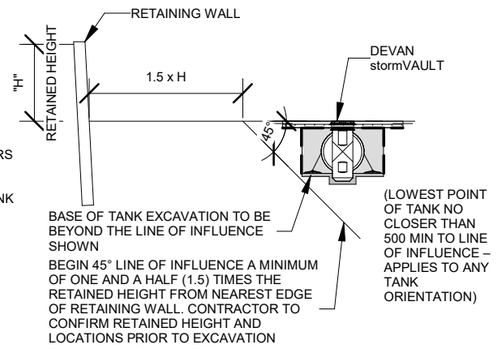


5 **TANK PLACEMENT NEAR RETAINING WALL**

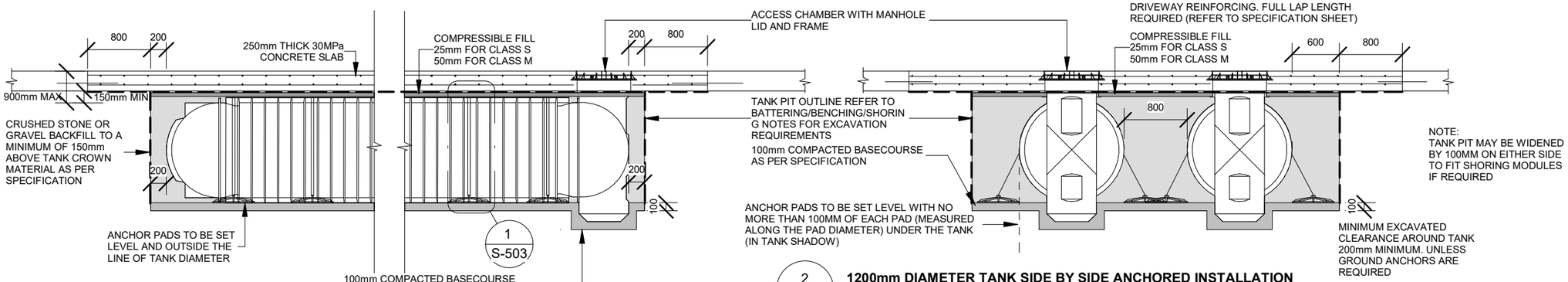


2 **1200mm DIAMETER TANK SIDE BY SIDE ANCHORED INSTALLATION**

NOTES:
- ALL DIMENSIONS IN MILLIMETRES UNO
- REFER TO STRUCTURAL SPECIFICATIONS SHEET OR CONCRETE REINFORCING & OTHER NOTES
- ALL LEVELS SHALL BE CONFIRMED BY THE CONTRACTOR PRIOR TO COMMENCEMENT OF WORK.
- ALL UNDERGROUND SERVICES SHALL BE CONFIRMED, LOCATED AND MARKED PRIOR TO ANY EXCAVATION WORKS,

- DEVAN PLASTICS LTD SHALL BE NOTIFIED IMMEDIATELY SHOULD ANY OF THE DESIGN PARAMETERS SHOWN ON THE DRAWINGS NOT BE ACHIEVABLE.

- REFER TO DEVAN PLASTICS LTD FOR MAXIMUM BURIAL DEPTH ALLOWANCES.

- TEMPORARY SUPPORT AND SHORING TO BE CARRIED OUT IN ACCORDANCE WITH WORKSAFE EXCAVATION SAFETY GUIDELINES.

- stormVAULT INSTALLATION TO BE CARRIED OUT IN CONJUCTION WITH DEVAN PRODUCT INFORMATION GUIDE AND THESE DRAWINGS

SOIL CONDITIONS
SITE SOIL CONDITIONS ALLOW FOR EXPANSIVE SOIL UP TO AND INCLUDING CLASS M AS DEFINED IN AS2870, PROVIDED AN ULTIMATE BEARING CAPACITY OF 300 KPA IS ACHIEVABLE FOR THE SUBGRADE DIRECTLY SUPPORTING THE SLAB AND THE BASECOURSE. NO ALLOWANCE FOR LIQUIFIABLE SOIL, OR SOIL WITH SLOPE STABILITY ISSUES. IT IS THE RESPONSIBILITY OF THE CONTRACTOR AND THE OWNER TO VERIFY THE SITE CONDITIONS PRIOR TO COMMENCING THE CONSTRUCTION WORKS.

TANK LOCATION - PROXIMITY TO NEARBY STRUCTURES:
IT IS THE CONTRACTOR AND OWNER'S RESPONSIBILITY TO ENSURE THAT THE LOCATION OF THE TANK WITH RESPECT TO ADJACENT STRUCTURES COMPLY WITH THE LIMITS AND RESTRICTIONS SET OUT IN THESE DRAWINGS. DEVAN PLASTICS LTD SHALL BE NOTIFIED IMMEDIATELY IF THOSE LIMITS ARE NOT ACHIEVABLE.

BACKFILL AND BASECOURSE:
GAP 10 or GAP 20 SHALL BE USED FOR BACKFILL AND BASECOURSE MATERIAL. ALTERNATIVE MATERIAL SHALL NOT BE USED WITHOUT THE WRITTEN APPROVAL OF DEVAN PLASTICS LTD.

CONTRACTOR SHALL BACKFILL LIFTS OF 150MM. THE CONTRACTOR SHALL USE THE APPROPRIATE TOOLS AND CONSTRUCTION TECHNIQUES TO ENSURE ALL VOIDS ARE FILLED ALONG THE FULL LENGTH OF THE TANK, ENSURING SUFFICIENT SUPPORT.

BATTERING/BENCHING/SHORING:
MANAGING THE STABILITY OF THE TRENCH DURING EXCAVATION IS THE RESPONSIBILITY OF THE CONTRACTOR, AND SHALL BE CARRIED OUT WITH THE RELEVANT GUIDELINES AND BEST PRACTICES IN ACCORDANCE WITH THE HEALTH AND SAFETY AT WORK ACT 2015. THIS INCLUDES, BUT NOT LIMITED TO, ANY EXCAVATIONS DEEPER THAN 1.5M. THE CONTRACTOR SHALL CONSULT WITH SUITABLE INDUSTRY PROFESIONALS SHOULD FURTHER GUIDANCE BE REQUIRED FOR BENCHING, BATTERING, AND SHORING.

LOADING:
COMMERCIAL VEHICLES WITH MAX AXLE LOAD OF 120kN (NZTA HN LOADING)
CONTRACTOR AND TANK OWNER TO ENSURE TANK POSITION DOES NOT EXPOSE THE TANK TO LOADS GREATER THAN SPECIFIED IN THESE DRAWINGS FOR THE DESIGN LIFE OF THE UNIT.

NOTE:
THIS SHEET IS FOR THE INSTALLATION OF TANKS REQUIRING ANCHOR PADS AS DETERMINED THROUGH "DEVAN PLASTICS stormVAULT UNDERGROUND CYLINDRICAL TANKS TOOLBOX VERSION 1.0 (OR HIGHER) CALCULATOR". IT IS THE RESPONSIBILITY OF THE CONTRACTOR AND OWNER TO ENSURE CORRECT TANK INSTALLATION IN ACCORDANCE WITH THE DEVAN INSTALLATION GUIDES AND DRAWINGS.

| REV | ISSUE | Date |
|---|---|---|
| 1 | FOR CONSTRUCTION | 16.04.25 |
| 0 | FOR CONSTRUCTION | 01.11.24 |

| | | |
|---|---|---|
| DESIGNED | SK | Contact SENZ when in doubt. Refer to Architectural Drawings for set out, do not scale Structural Engineering Drawings |
| CHECKED | SK/RR | |
| DRAWN | AS | |


Business Address: L1, 52 Highbrook Drive, East Tamaki, Auckland 2013
Phone Number: +64 9 275 6029
Evening Number: +64 9 889 9350
E-mail Address: info@structural-engs.co.nz
Website: www.structural-engs.co.nz


SENZ Structural Engineers New Zealand

CLIENT DEVAN

PROJECT
**DEVAN PLASTICS STANDARD DESIGN FOR UNDERGROUND TANKS**

FOR CONSTRUCTION

SHEET TITLE
**HN COMMERCIAL TRAFFIC LOADING - DOUBLE TANK INSTALLATION INSTRUCTIONS WITH ANCHORS - SLAB ON CLASS M EXPANSIVE SOIL**

SCALE: As indicated @ A3; 1:A3x2 @ A1

Drawing No. 059-003 -S-503

REVISION 1

NOTE:
stormVAULT 800mm TANKS MAY BE DIRECTLY SUBSTITUTED WITH THE stormVAULT 1200mm TANKS, PROVIDED ALL DIMENSIONAL CONSTRAINTS IN THESE DRAWINGS ARE FOLLOWED.

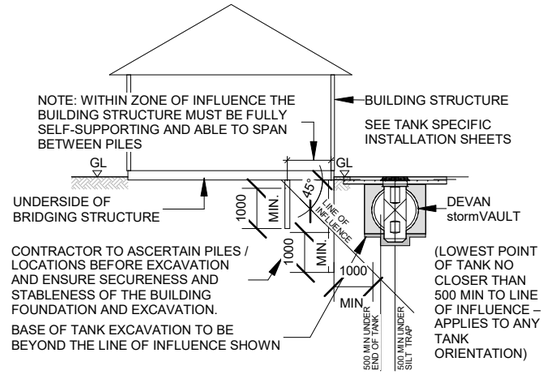


2 **TANK PLACEMENT NEAR PILED FOUNDATIONS**

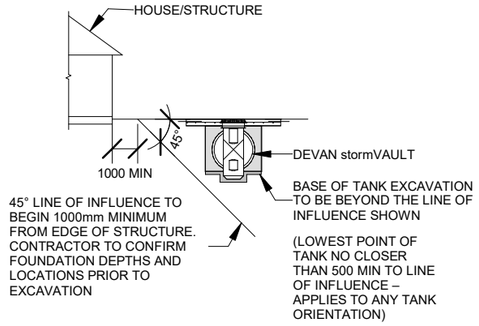


3 **TANK PLACEMENT NEAR BUILDING STRUCTURE**

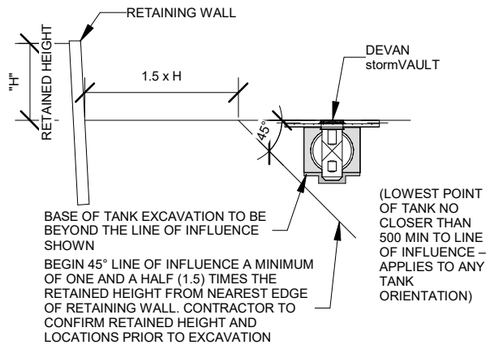


4 **TANK PLACEMENT NEAR RETAINING WALL**

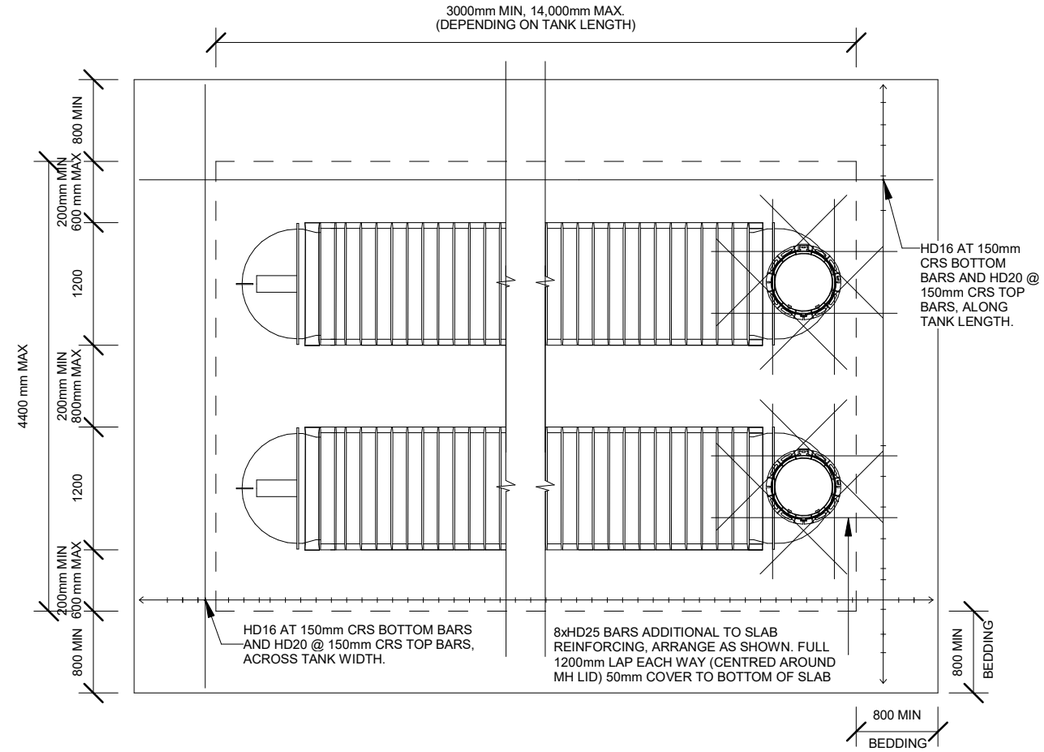


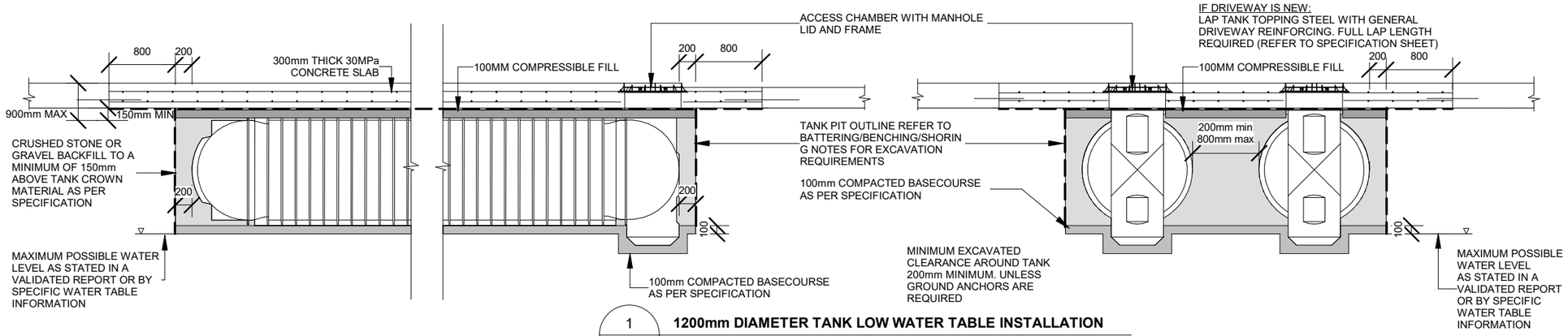


1 **1200mm DIAMETER TANK LOW WATER TABLE INSTALLATION**

NOTES:
- ALL DIMENSIONS IN MILLIMETRES UNO
- REFER TO STRUCTURAL SPECIFICATIONS SHEET OR CONCRETE REINFORCING & OTHER NOTES
- ALL LEVELS SHALL BE CONFIRMED BY THE CONTRACTOR PRIOR TO COMMENCEMENT OF WORK.
- ALL UNDERGROUND SERVICES SHALL BE CONFIRMED, LOCATED AND MARKED PRIOR TO ANY EXCAVATION WORKS,

- DEVAN PLASTICS LTD SHALL BE NOTIFIED IMMEDIATELY SHOULD ANY OF THE DESIGN PARAMETERS SHOWN ON THE DRAWINGS NOT BE ACHIEVABLE.

- REFER TO DEVAN PLASTICS LTD FOR MAXIMUM BURIAL DEPTH ALLOWANCES.

- TEMPORARY SUPPORT AND SHORING TO BE CARRIED OUT IN ACCORDANCE WITH WORKSAFE EXCAVATION SAFETY GUIDELINES.

- stormVAULT INSTALLATION TO BE CARRIED OUT IN CONJUCTION WITH DEVAN PRODUCT INFORMATION GUIDE AND THESE DRAWINGS

SOIL CONDITIONS
SITE SOIL CONDITIONS ALLOW FOR EXPANSIVE SOIL UP TO AND INCLUDING CLASS H2 AS DEFINED IN AS2870, PROVIDED AN ULTIMATE BEARING CAPACITY OF 300 KPA IS ACHIEVABLE FOR THE SUBGRADE DIRECTLY SUPPORTING THE SLAB AND THE BASECOURSE. NO ALLOWANCE FOR LIQUIFIABLE SOIL, OR SOIL WITH SLOPE STABILITY ISSUES. IT IS THE RESPONSIBILITY OF THE CONTRACTOR AND THE OWNER TO VERIFY THE SITE CONDITIONS PRIOR TO COMMENCING THE CONSTRUCTION WORKS.

TANK LOCATION - PROXIMITY TO NEARBY STRUCTURES:
IT IS THE CONTRACTOR AND OWNER'S RESPONSIBILITY TO ENSURE THAT THE LOCATION OF THE TANK WITH RESPECT TO ADJACENT STRUCTURES COMPLY WITH THE LIMITS AND RESTRICTIONS SET OUT IN THESE DRAWINGS. DEVAN PLASTICS LTD SHALL BE NOTIFIED IMMEDIATELY IF THOSE LIMITS ARE NOT ACHIEVABLE.

BACKFILL AND BASECOURSE:
GAP 10 or GAP 20 SHALL BE USED FOR BACKFILL AND BASECOURSE MATERIAL. ALTERNATIVE MATERIAL SHALL NOT BE USED WITHOUT THE WRITTEN APPROVAL OF DEVAN PLASTICS LTD.

CONTRACTOR SHALL BACKFILL LIFTS OF 150MM. THE CONTRACTOR SHALL USE THE APPROPRIATE TOOLS AND CONSTRUCTION TECHNIQUES TO ENSURE ALL VOIDS ARE FILLED ALONG THE FULL LENGTH OF THE TANK, ENSURING SUFFICIENT SUPPORT.

BATTERING/BENCHING/SHORING:
MANAGING THE STABILITY OF THE TRENCH DURING EXCAVATION IS THE RESPONSIBILITY OF THE CONTRACTOR, AND SHALL BE CARRIED OUT WITH THE RELEVANT GUIDELINES AND BEST PRACTICES IN ACCORDANCE WITH THE HEALTH AND SAFETY AT WORK ACT 2015. THIS INCLUDES, BUT NOT LIMITED TO, ANY EXCAVATIONS DEEPER THAN 1.5M. THE CONTRACTOR SHALL CONSULT WITH SUITABLE INDUSTRY PROFESIONALS SHOULD FURTHER GUIDANCE BE REQUIRED FOR BENCHING, BATTERING, AND SHORING.

LOADING:
COMMERCIAL VEHICLES WITH MAX AXLE LOAD OF 120kN (NZTA HN LOADING)
CONTRACTOR AND TANK OWNER TO ENSURE TANK POSITION DOES NOT EXPOSE THE TANK TO LOADS GREATER THAN SPECIFIED IN THESE DRAWINGS FOR THE DESIGN LIFE OF THE UNIT.

NOTE:
THIS SHEET IS FOR THE INSTALLATION OF TANKS ABOVE MAXIMUM POSSIBLE WATER TABLE LEVELS OR FOR INSTALLATIONS NOT REQUIRING ANCHOR PADS AS DETERMINED THROUGH "DEVAN PLASTICS stormVAULT UNDERGROUND CYLINDRICAL TANKS TOOLBOX VERSION 1.0 (OR HIGHER) CALCULATOR". IF TANKS ARE BEING INSTALLED ABOVE MAXIMUM POSSIBLE WATER TABLE LEVELS THEN SITE SPECIFIC REPORTS OR WATER TABLE INFORMATION MUST PROVE THE WATER LEVEL CAN NOT POSSIBLY RISE ABOVE THE BOTTOM OF THE EXCAVATION. IF THIS INFORMATION CAN NOT BE PROVIDED, REFER TO SHEET 059-003-S-505. IT IS THE RESPONSIBILITY OF THE CONTRACTOR AND OWNER TO ENSURE CORRECT TANK INSTALLATION IN ACCORDANCE WITH THE DEVAN INSTALLATION GUIDES AND DRAWINGS.

| REV | ISSUE | Date |
|---|---|---|
| 1 | FOR CONSTRUCTION | 16.04.25 |
| 0 | FOR CONSTRUCTION | 01.11.24 |

| | | |
|---|---|---|
| DESIGNED | SK | Contact SENZ when in doubt. Refer to Architectural Drawings for set out, do not scale Structural Engineering Drawings |
| CHECKED | SK/RR | Business Address: L1, 52 Highbrook Drive, East Tamaki, Auckland 2013 |
| DRAWN | AS | Phone Number: +64 9 275 6029<br>Evening Number: +64 9 889 9350<br>E-mail Address: info@structural-engs.co.nz<br>Website: www.structural-engs.co.nz |

SENZ Structural Engineers New Zealand

CLIENT DEVAN

PROJECT
**DEVAN PLASTICS STANDARD DESIGN FOR UNDERGROUND TANKS**

SHEET TITLE
**HN COMMERCIAL TRAFFIC LOADING - DOUBLE TANK INSTALLATION INSTRUCTIONS WITHOUT ANCHORS - SLAB ON CLASS H2 EXPANSIVE SOIL**

FOR CONSTRUCTION

| SCALE | Drawing No. | REVISION |
|---|---|---|
| As indicated @ A3<br>1:A3x2 @ A1 | 059-003 -S-504 | 1 |

NOTE:
stormVAULT 800mm TANKS MAY BE DIRECTLY SUBSTITUTED WITH THE stormVAULT 1200mm TANKS, PROVIDED ALL DIMENSIONAL CONSTRAINTS IN THESE DRAWINGS ARE FOLLOWED.

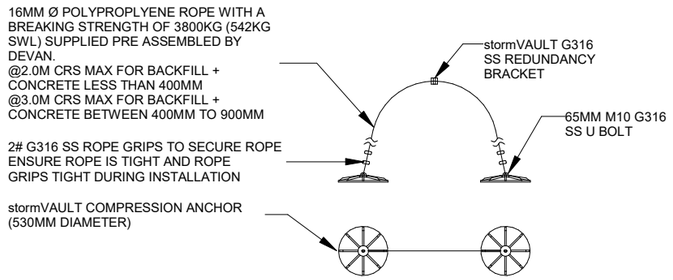


1 S-505 **DETAIL**

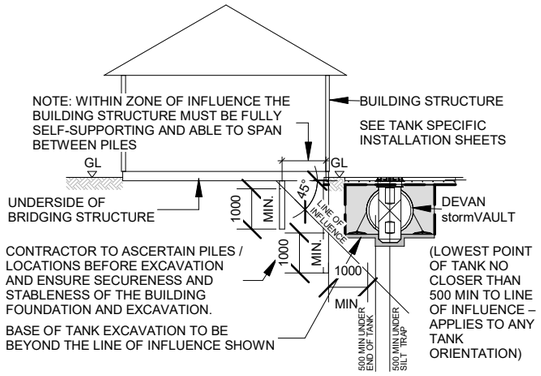


3 **TANK PLACEMENT NEAR PILED FOUNDATIONS**

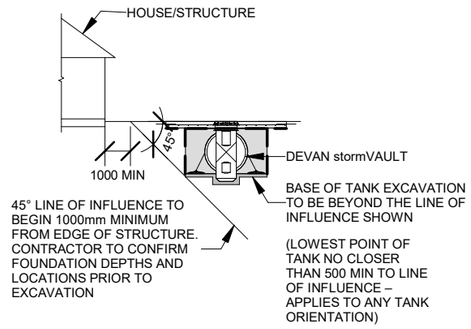


4 **TANK PLACEMENT NEAR BUILDING STRUCTURE**

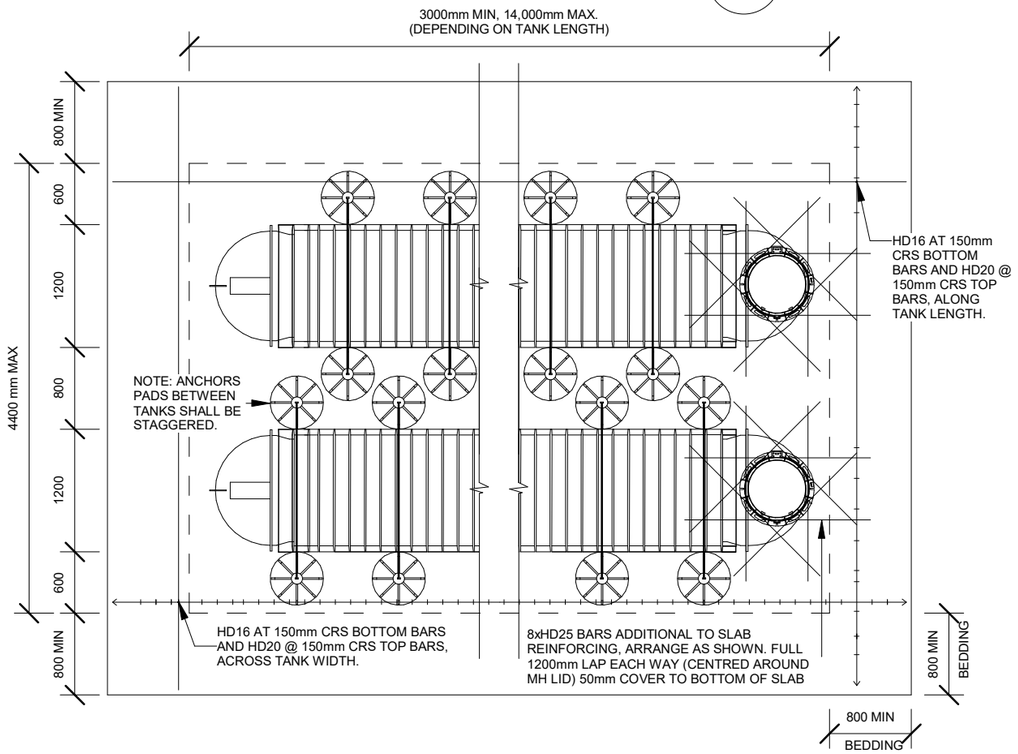


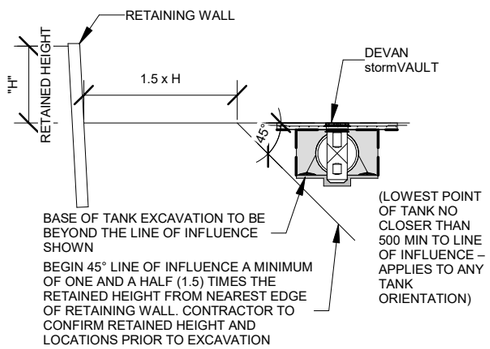


5 **TANK PLACEMENT NEAR RETAINING WALL**

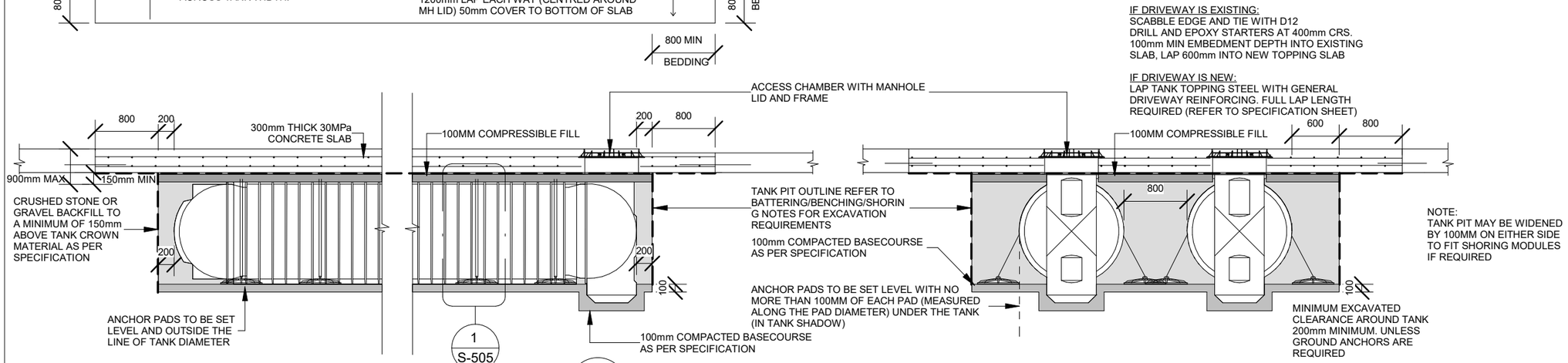


2 **1200mm DIAMETER TANK ANCHORED INSTALLATION**

NOTES:
- ALL DIMENSIONS IN MILLIMETRES UNO
- REFER TO STRUCTURAL SPECIFICATIONS SHEET OR CONCRETE REINFORCING & OTHER NOTES
- ALL LEVELS SHALL BE CONFIRMED BY THE CONTRACTOR PRIOR TO COMMENCEMENT OF WORK.
- ALL UNDERGROUND SERVICES SHALL BE CONFIRMED, LOCATED AND MARKED PRIOR TO ANY EXCAVATION WORKS,

- DEVAN PLASTICS LTD SHALL BE NOTIFIED IMMEDIATELY SHOULD ANY OF THE DESIGN PARAMETERS SHOWN ON THE DRAWINGS NOT BE ACHIEVABLE.

- REFER TO DEVAN PLASTICS LTD FOR MAXIMUM BURIAL DEPTH ALLOWANCES.

- TEMPORARY SUPPORT AND SHORING TO BE CARRIED OUT IN ACCORDANCE WITH WORKSAFE EXCAVATION SAFETY GUIDELINES.

- stormVAULT INSTALLATION TO BE CARRIED OUT IN CONJUCTION WITH DEVAN PRODUCT INFORMATION GUIDE AND THESE DRAWINGS

SOIL CONDITIONS
SITE SOIL CONDITIONS ALLOW FOR EXPANSIVE SOIL UP TO AND INCLUDING CLASS H2 AS DEFINED IN AS2870, PROVIDED AN ULTIMATE BEARING CAPACITY OF 300 KPA IS ACHIEVABLE FOR THE SUBGRADE DIRECTLY SUPPORTING THE SLAB AND THE BASECOURSE. NO ALLOWANCE FOR LIQUIFIABLE SOIL, OR SOIL WITH SLOPE STABILITY ISSUES. IT IS THE RESPONSIBILITY OF THE CONTRACTOR AND THE OWNER TO VERIFY THE SITE CONDITIONS PRIOR TO COMMENCING THE CONSTRUCTION WORKS.

TANK LOCATION - PROXIMITY TO NEARBY STRUCTURES:
IT IS THE CONTRACTOR AND OWNER'S RESPONSIBILITY TO ENSURE THAT THE LOCATION OF THE TANK WITH RESPECT TO ADJACENT STRUCTURES COMPLY WITH THE LIMITS AND RESTRICTIONS SET OUT IN THESE DRAWINGS. DEVAN PLASTICS LTD SHALL BE NOTIFIED IMMEDIATELY IF THOSE LIMITS ARE NOT ACHIEVABLE.

BACKFILL AND BASECOURSE:
GAP 10 or GAP 20 SHALL BE USED FOR BACKFILL AND BASECOURSE MATERIAL. ALTERNATIVE MATERIAL SHALL NOT BE USED WITHOUT THE WRITTEN APPROVAL OF DEVAN PLASTICS LTD.

CONTRACTOR SHALL BACKFILL LIFTS OF 150MM. THE CONTRACTOR SHALL USE THE APPROPRIATE TOOLS AND CONSTRUCTION TECHNIQUES TO ENSURE ALL VOIDS ARE FILLED ALONG THE FULL LENGTH OF THE TANK, ENSURING SUFFICIENT SUPPORT.

BATTERING/BENCHING/SHORING:
MANAGING THE STABILITY OF THE TRENCH DURING EXCAVATION IS THE RESPONSIBILITY OF THE CONTRACTOR, AND SHALL BE CARRIED OUT WITH THE RELEVANT GUIDELINES AND BEST PRACTICES IN ACCORDANCE WITH THE HEALTH AND SAFETY AT WORK ACT 2015. THIS INCLUDES, BUT NOT LIMITED TO, ANY EXCAVATIONS DEEPER THAN 1.5M. THE CONTRACTOR SHALL CONSULT WITH SUITABLE INDUSTRY PROFESIONALS SHOULD FURTHER GUIDANCE BE REQUIRED FOR BENCHING, BATTERING, AND SHORING.

LOADING:
COMMERCIAL VEHICLES WITH MAX AXLE LOAD OF 120kN (NZTA HN LOADING)
CONTRACTOR AND TANK OWNER TO ENSURE TANK POSITION DOES NOT EXPOSE THE TANK TO LOADS GREATER THAN SPECIFIED IN THESE DRAWINGS FOR THE DESIGN LIFE OF THE UNIT.

NOTE:
THIS SHEET IS FOR THE INSTALLATION OF TANKS REQUIRING ANCHOR PADS AS DETERMINED THROUGH "DEVAN PLASTICS stormVAULT UNDERGROUND CYLINDRICAL TANKS TOOLBOX VERSION 1.0 (OR HIGHER) CALCULATOR". IT IS THE RESPONSIBILITY OF THE CONTRACTOR AND OWNER TO ENSURE CORRECT TANK INSTALLATION IN ACCORDANCE WITH THE DEVAN INSTALLATION GUIDES AND DRAWINGS.

| REV | ISSUE | Date |
|---|---|---|
| 1 | FOR CONSTRUCTION | 16.04.25 |
| 0 | FOR CONSTRUCTION | 01.11.24 |

| | | |
|---|---|---|
| DESIGNED | SK | Contact SENZ when in doubt. Refer to Architectural Drawings for set out, do not scale Structural Engineering Drawings |
| CHECKED | SK/RR | Business Address: L1, 52 Highbrook Drive, East Tamaki, Auckland 2013 |
| DRAWN | AS | Phone Number: +64 9 275 6029<br>Evening Number: +64 9 889 9350<br>E-mail Address: info@structural-engs.co.nz<br>Website: www.structural-engs.co.nz |

SENZ Structural Engineers New Zealand

CLIENT DEVAN

PROJECT
**DEVAN PLASTICS STANDARD DESIGN FOR UNDERGROUND TANKS**

SHEET TITLE
**HN COMMERCIAL TRAFFIC LOADING - DOUBLE TANK INSTALLATION INSTRUCTIONS WITH ANCHORS - SLAB ON CLASS H2 EXPANSIVE SOIL**

FOR CONSTRUCTION

| SCALE | Drawing No. | REVISION |
|---|---|---|
| As indicated @ A3<br>1:A3x2 @ A1 | 059-003 -S-505 | 1 |

NOTE:
stormVAULT 800mm TANKS MAY BE DIRECTLY SUBSTITUTED WITH THE stormVAULT 1200mm TANKS, PROVIDED ALL DIMENSIONAL CONSTRAINTS IN THESE DRAWINGS ARE FOLLOWED.

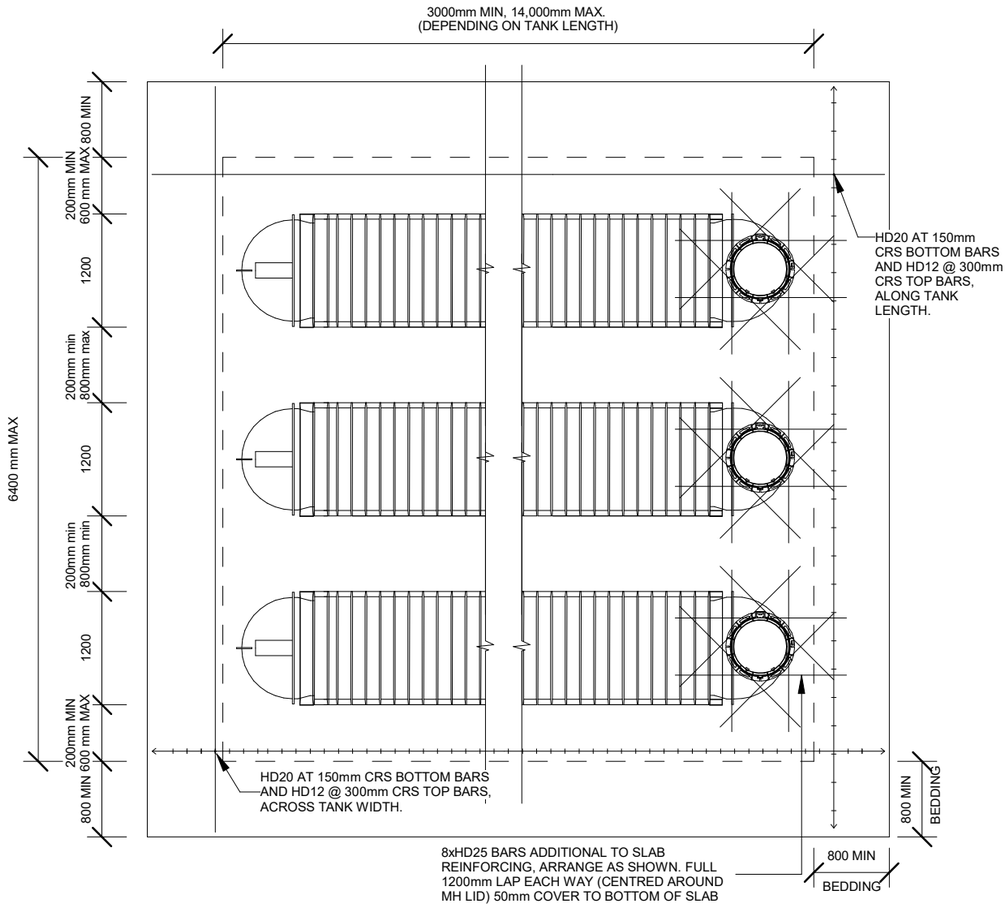


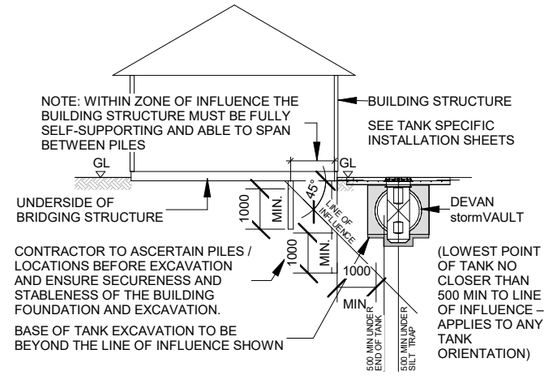


2 **TANK PLACEMENT NEAR PILED FOUNDATIONS**

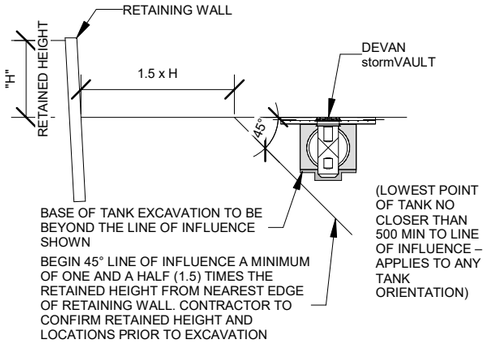


3 **TANK PLACEMENT NEAR RETAINING WALL**

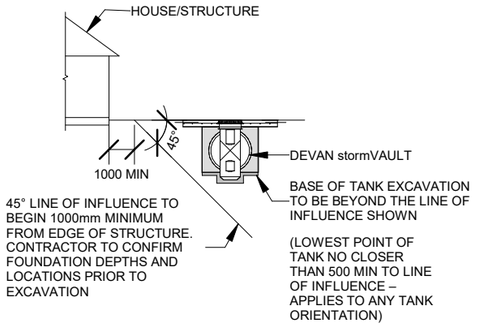


4 **TANK PLACEMENT NEAR BUILDING STRUCTURE**

IF DRIVEWAY IS EXISTING:
SCABBLE EDGE AND TIE WITH D12 DRILL AND EPOXY STARTERS AT 400mm CRS. 100mm MIN EMBEDMENT DEPTH INTO EXISTING SLAB, LAP 600mm INTO NEW TOPPING SLAB

IF DRIVEWAY IS NEW:
LAP TANK TOPPING STEEL WITH GENERAL DRIVEWAY REINFORCING. FULL LAP LENGTH REQUIRED (REFER TO SPECIFICATION SHEET)

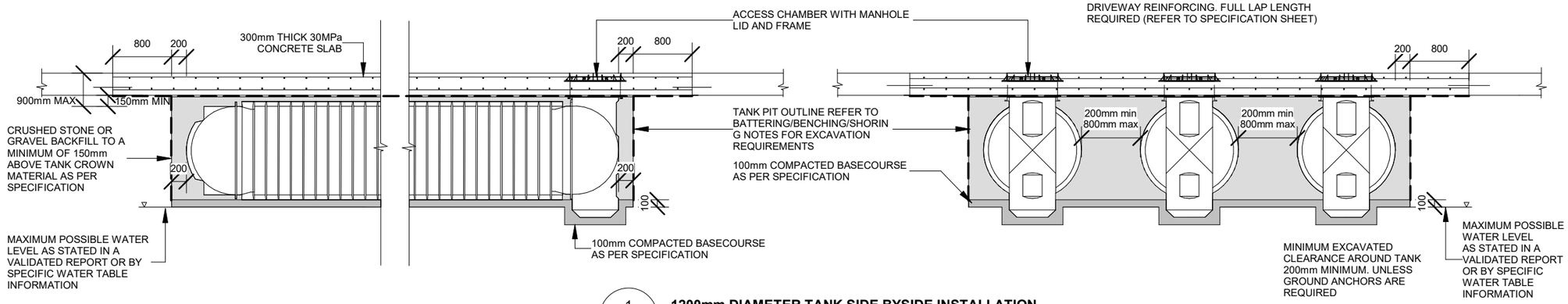


1 **1200mm DIAMETER TANK SIDE BYSIDE INSTALLATION**

NOTES:
- ALL DIMENSIONS IN MILLIMETRES UNO
- REFER TO STRUCTURAL SPECIFICATIONS SHEET OR CONCRETE REINFORCING & OTHER NOTES
- ALL LEVELS SHALL BE CONFIRMED BY THE CONTRACTOR PRIOR TO COMMENCEMENT OF WORK.
- ALL UNDERGROUND SERVICES SHALL BE CONFIRMED, LOCATED AND MARKED PRIOR TO ANY EXCAVATION WORKS,

- DEVAN PLASTICS LTD SHALL BE NOTIFIED IMMEDIATELY SHOULD ANY OF THE DESIGN PARAMETERS SHOWN ON THE DRAWINGS NOT BE ACHIEVABLE.

- REFER TO DEVAN PLASTICS LTD FOR MAXIMUM BURIAL DEPTH ALLOWANCES.

- TEMPORARY SUPPORT AND SHORING TO BE CARRIED OUT IN ACCORDANCE WITH WORKSAFE EXCAVATION SAFETY GUIDELINES.

- stormVAULT INSTALLATION TO BE CARRIED OUT IN CONJUCTION WITH DEVAN PRODUCT INFORMATION GUIDE AND THESE DRAWINGS

SOIL CONDITIONS
SITE SOIL CONDITIONS ARE CONSISTENT WITH "GOOD GROUND" AS DEFINED IN NZS3604:2011. i.e. NO ALLOWANCE FOR EXPANSIVE OR LIQUIFIABLE SOIL, OR SOIL WITH SLOPE STABILITY ISSUES. IT IS THE RESPONSIBILITY OF THE CONTRACTOR AND THE OWNER TO VERIFY THE SITE CONDITIONS PRIOR TO COMMENCING THE CONSTRUCTION WORKS.

TANK LOCATION - PROXIMITY TO NEARBY STRUCTURES:
IT IS THE CONTRACTOR AND OWNER'S RESPONSIBILITY TO ENSURE THAT THE LOCATION OF THE TANK WITH RESPECT TO ADJACENT STRUCTURES COMPLY WITH THE LIMITS AND RESTRICTIONS SET OUT IN THESE DRAWINGS. DEVAN PLASTICS LTD SHALL BE NOTIFIED IMMEDIATELY IF THOSE LIMITS ARE NOT ACHIEVABLE.

BACKFILL AND BASECOURSE:
GAP 10 or GAP 20 SHALL BE USED FOR BACKFILL AND BASECOURSE MATERIAL. ALTERNATIVE MATERIAL SHALL NOT BE USED WITHOUT THE WRITTEN APPROVAL OF DEVAN PLASTICS LTD.

CONTRACTOR SHALL BACKFILL LIFTS OF 150MM. THE CONTRACTOR SHALL USE THE APPROPRIATE TOOLS AND CONSTRUCTION TECHNIQUES TO ENSURE ALL VOIDS ARE FILLED ALONG THE FULL LENGTH OF THE TANK, ENSURING SUFFICIENT SUPPORT.

BATTERING/BENCHING/SHORING:
MANAGING THE STABILITY OF THE TRENCH DURING EXCAVATION IS THE RESPONSIBILITY OF THE CONTRACTOR, AND SHALL BE CARRIED OUT WITH THE RELEVANT GUIDELINES AND BEST PRACTICES IN ACCORDANCE WITH THE HEALTH AND SAFETY AT WORK ACT 2015. THIS INCLUDES, BUT NOT LIMITED TO, ANY EXCAVATIONS DEEPER THAN 1.5M. THE CONTRACTOR SHALL CONSULT WITH SUITABLE INDUSTRY PROFESIONALS SHOULD FURTHER GUIDANCE BE REQUIRED FOR BENCHING, BATTERING, AND SHORING.

LOADING:
COMMERCIAL VEHICLES WITH MAX AXLE LOAD OF 120kN (NZTA HN LOADING)
CONTRACTOR AND TANK OWNER TO ENSURE TANK POSITION DOES NOT EXPOSE THE TANK TO LOADS GREATER THAN SPECIFIED IN THESE DRAWINGS FOR THE DESIGN LIFE OF THE UNIT.

NOTE:
THIS SHEET IS FOR THE INSTALLATION OF TANKS ABOVE MAXIMUM POSSIBLE WATER TABLE LEVELS OR FOR INSTALLATIONS NOT REQUIRING ANCHOR PADS AS DETERMINED THROUGH "DEVAN PLASTICS stormVAULT UNDERGROUND CYLINDRICAL TANKS TOOLBOX VERSION 1.0 (OR HIGHER) CALCULATOR". IF TANKS ARE BEING INSTALLED ABOVE MAXIMUM POSSIBLE WATER TABLE LEVELS THEN SITE SPECIFIC REPORTS OR WATER TABLE INFORMATION MUST PROVE THE WATER LEVEL CAN NOT POSSIBLY RISE ABOVE THE BOTTOM OF THE EXCAVATION. IF THIS INFORMATION CAN NOT BE PROVIDED, REFER TO SHEET 059-003-S-601. IT IS THE RESPONSIBILITY OF THE CONTRACTOR AND OWNER TO ENSURE CORRECT TANK INSTALLATION IN ACCORDANCE WITH THE DEVAN INSTALLATION GUIDES AND DRAWINGS.

| REV | ISSUE | Date |
|---|---|---|
| 1 | FOR CONSTRUCTION | 16.04.25 |
| 0 | FOR CONSTRUCTION | 01.11.24 |

| | | |
|---|---|---|
| DESIGNED | SK | Contact SENZ when in doubt. Refer to Architectural Drawings for set out, do not scale Structural Engineering Drawings |
| CHECKED | SK/RR | Business Address: L1, 52 Highbrook Drive, East Tamaki, Auckland 2013 |
| DRAWN | AS | Phone Number: +64 9 275 6029<br>Evening Number: +64 9 889 9350<br>E-mail Address: info@structural-engs.co.nz<br>Website: www.structural-engs.co.nz |

SENZ Structural Engineers New Zealand

CLIENT DEVAN

PROJECT
**DEVAN PLASTICS STANDARD DESIGN FOR UNDERGROUND TANKS**

SHEET TITLE
**HN COMMERCIAL TRAFFIC LOADING - TRIPLE TANK INSTALLATION INSTRUCTIONS WITHOUT ANCHORS - SLAB ON GOOD GROUND**

FOR CONSTRUCTION

| SCALE | Drawing No. | REVISION |
|---|---|---|
| As indicated @ A3<br>1:A3x2 @ A1 | 059-003 -S-600 | 1 |

NOTE:
stormVAULT 800mm TANKS MAY BE DIRECTLY SUBSTITUTED WITH THE stormVAULT 1200mm TANKS, PROVIDED ALL DIMENSIONAL CONSTRAINTS IN THESE DRAWINGS ARE FOLLOWED.

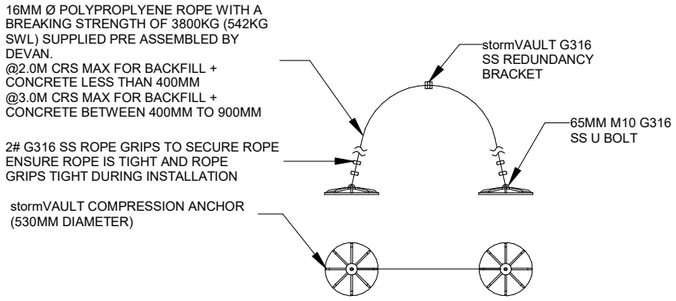


1 S-601 **DETAIL**

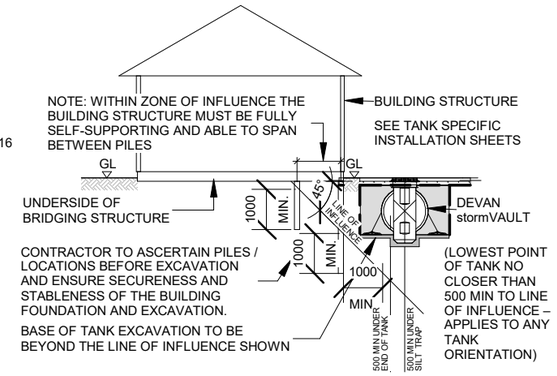


3 **TANK PLACEMENT NEAR PILED FOUNDATIONS**

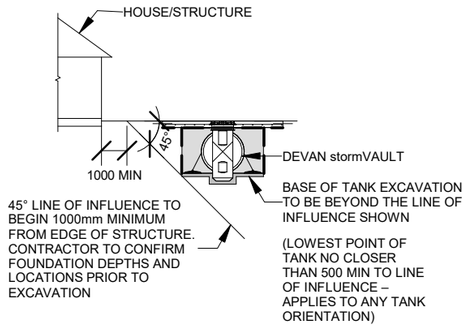


4 **TANK PLACEMENT NEAR BUILDING STRUCTURE**

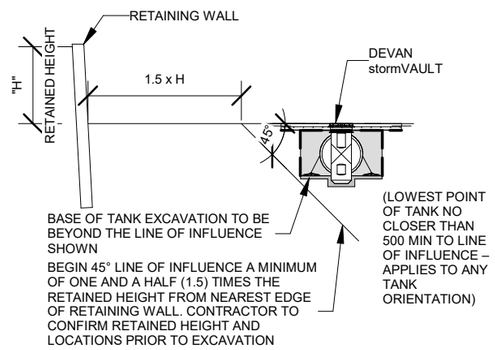


5 **TANK PLACEMENT NEAR RETAINING WALL**

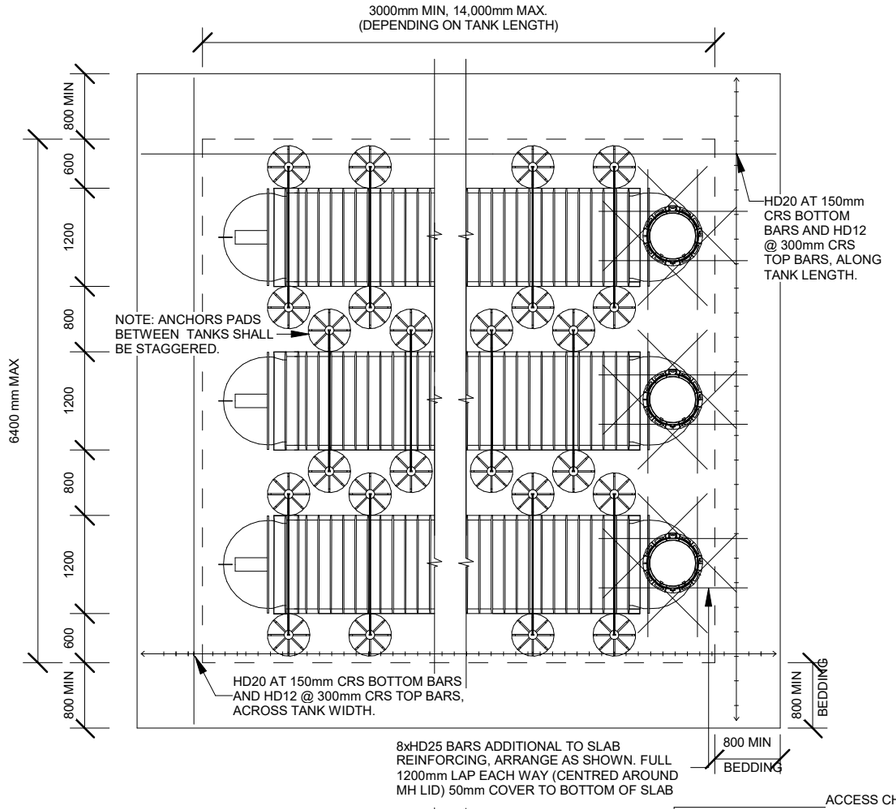


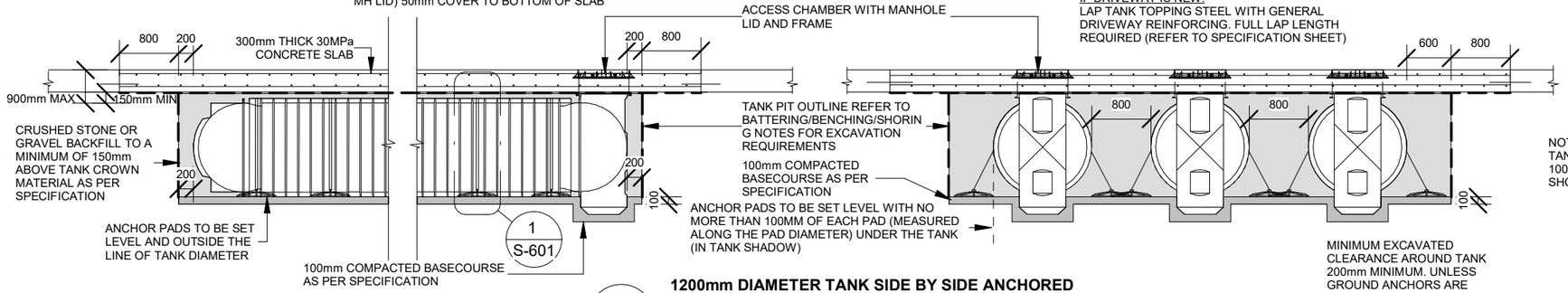


NOTE:
TANK PIT MAY BE WIDENED BY 100MM ON EITHER SIDE TO FIT SHORING MODULES IF REQUIRED

2 **1200mm DIAMETER TANK SIDE BY SIDE ANCHORED INSTALLATION**

NOTES:
- ALL DIMENSIONS IN MILLIMETRES UNO
- REFER TO STRUCTURAL SPECIFICATIONS SHEET OR CONCRETE REINFORCING & OTHER NOTES
- ALL LEVELS SHALL BE CONFIRMED BY THE CONTRACTOR PRIOR TO COMMENCEMENT OF WORK.
- ALL UNDERGROUND SERVICES SHALL BE CONFIRMED, LOCATED AND MARKED PRIOR TO ANY EXCAVATION WORKS,

- DEVAN PLASTICS LTD SHALL BE NOTIFIED IMMEDIATELY SHOULD ANY OF THE DESIGN PARAMETERS SHOWN ON THE DRAWINGS NOT BE ACHIEVABLE.

- REFER TO DEVAN PLASTICS LTD FOR MAXIMUM BURIAL DEPTH ALLOWANCES.

- TEMPORARY SUPPORT AND SHORING TO BE CARRIED OUT IN ACCORDANCE WITH WORKSAFE EXCAVATION SAFETY GUIDELINES.

- stormVAULT INSTALLATION TO BE CARRIED OUT IN CONJUCTION WITH DEVAN PRODUCT INFORMATION GUIDE AND THESE DRAWINGS

SOIL CONDITIONS
SITE SOIL CONDITIONS ARE CONSISTENT WITH "GOOD GROUND" AS DEFINED IN NZS3604:2011. i.e. NO ALLOWANCE FOR EXPANSIVE OR LIQUIFIABLE SOIL, OR SOIL WITH SLOPE STABILITY ISSUES. IT IS THE RESPONSIBILITY OF THE CONTRACTOR AND THE OWNER TO VERIFY THE SITE CONDITIONS PRIOR TO COMMENCING THE CONSTRUCTION WORKS.

TANK LOCATION - PROXIMITY TO NEARBY STRUCTURES:
IT IS THE CONTRACTOR AND OWNER'S RESPONSIBILITY TO ENSURE THAT THE LOCATION OF THE TANK WITH RESPECT TO ADJACENT STRUCTURES COMPLY WITH THE LIMITS AND RESTRICTIONS SET OUT IN THESE DRAWINGS. DEVAN PLASTICS LTD SHALL BE NOTIFIED IMMEDIATELY IF THOSE LIMITS ARE NOT ACHIEVABLE.

BACKFILL AND BASECOURSE:
GAP 10 or GAP 20 SHALL BE USED FOR BACKFILL AND BASECOURSE MATERIAL. ALTERNATIVE MATERIAL SHALL NOT BE USED WITHOUT THE WRITTEN APPROVAL OF DEVAN PLASTICS LTD.

CONTRACTOR SHALL BACKFILL LIFTS OF 150MM. THE CONTRACTOR SHALL USE THE APPROPRIATE TOOLS AND CONSTRUCTION TECHNIQUES TO ENSURE ALL VOIDS ARE FILLED ALONG THE FULL LENGTH OF THE TANK, ENSURING SUFFICIENT SUPPORT.

BATTERING/BENCHING/SHORING:
MANAGING THE STABILITY OF THE TRENCH DURING EXCAVATION IS THE RESPONSIBILITY OF THE CONTRACTOR, AND SHALL BE CARRIED OUT WITH THE RELEVANT GUIDELINES AND BEST PRACTICES IN ACCORDANCE WITH THE HEALTH AND SAFETY AT WORK ACT 2015. THIS INCLUDES, BUT NOT LIMITED TO, ANY EXCAVATIONS DEEPER THAN 1.5M. THE CONTRACTOR SHALL CONSULT WITH SUITABLE INDUSTRY PROFESIONALS SHOULD FURTHER GUIDANCE BE REQUIRED FOR BENCHING, BATTERING, AND SHORING.

LOADING:
COMMERCIAL VEHICLES WITH MAX AXLE LOAD OF 120kN (NZTA HN LOADING)
CONTRACTOR AND TANK OWNER TO ENSURE TANK POSITION DOES NOT EXPOSE THE TANK TO LOADS GREATER THAN SPECIFIED IN THESE DRAWINGS FOR THE DESIGN LIFE OF THE UNIT.

NOTE:
THIS SHEET IS FOR THE INSTALLATION OF TANKS REQUIRING ANCHOR PADS AS DETERMINED THROUGH "DEVAN PLASTICS stormVAULT UNDERGROUND CYLINDRICAL TANKS TOOLBOX VERSION 1.0 (OR HIGHER) CALCULATOR". IT IS THE RESPONSIBILITY OF THE CONTRACTOR AND OWNER TO ENSURE CORRECT TANK INSTALLATION IN ACCORDANCE WITH THE DEVAN INSTALLATION GUIDES AND DRAWINGS.

| REV | ISSUE | Date |
|---|---|---|
| 1 | FOR CONSTRUCTION | 16.04.25 |
| 0 | FOR CONSTRUCTION | 01.11.24 |

| | | |
|---|---|---|
| DESIGNED | SK | Contact SENZ when in doubt. Refer to Architectural Drawings for set out, do not scale Structural Engineering Drawings |
| CHECKED | SK/RR | Business Address: L1, 52 Highbrook Drive, East Tamaki, Auckland 2013 |
| DRAWN | AS | Phone Number: +64 9 275 6029<br>Evening Number: +64 9 889 9350<br>E-mail Address: info@structural-engs.co.nz<br>Website: www.structural-engs.co.nz |

SENZ Structural Engineers New Zealand

CLIENT DEVAN

PROJECT
**DEVAN PLASTICS STANDARD DESIGN FOR UNDERGROUND TANKS**

SHEET TITLE
**HN COMMERCIAL TRAFFIC LOADING - TRIPLE TANK INSTALLATION INSTRUCTIONS WITH ANCHORS - SLAB ON GOOD GROUND**

FOR CONSTRUCTION

| SCALE | Drawing No. | REVISION |
|---|---|---|
| As indicated @ A3<br>1:A3x2 @ A1 | 059-003 -S-601 | 1 |

NOTE:
stormVAULT 800mm TANKS MAY BE DIRECTLY SUBSTITUTED WITH THE stormVAULT 1200mm TANKS, PROVIDED ALL DIMENSIONAL CONSTRAINTS IN THESE DRAWINGS ARE FOLLOWED.

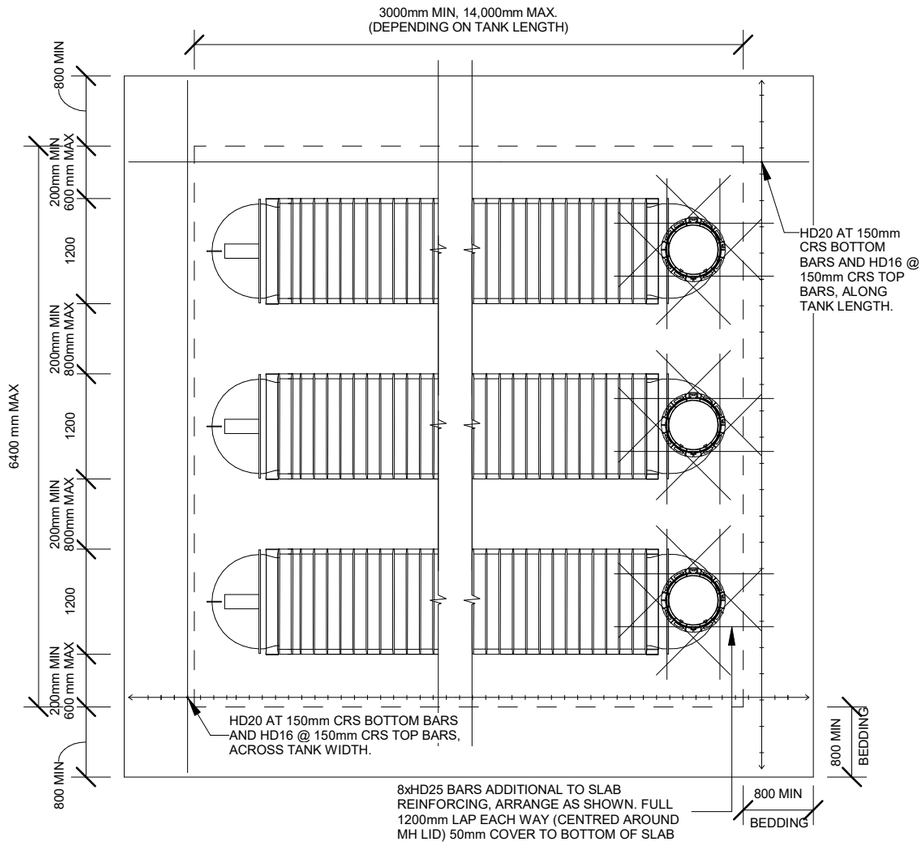


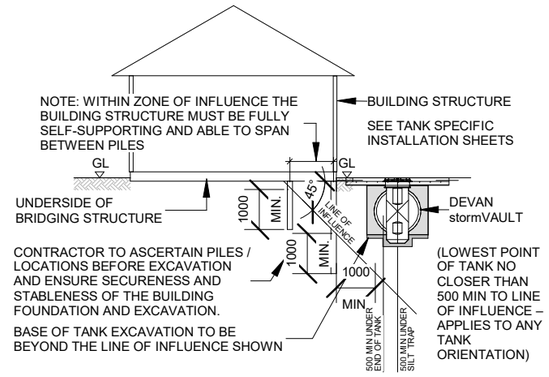


2 **TANK PLACEMENT NEAR PILED FOUNDATIONS**

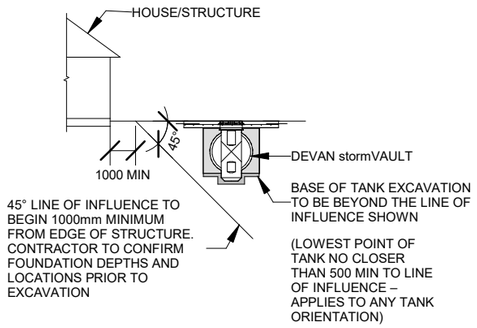


3 **TANK PLACEMENT NEAR BUILDING STRUCTURE**

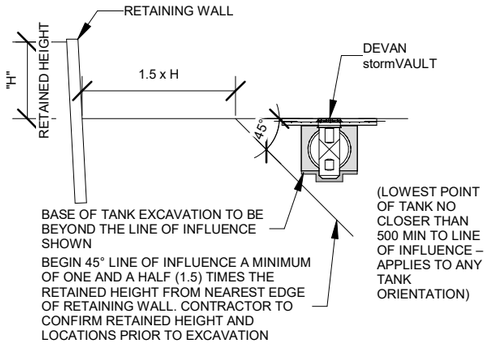


4 **TANK PLACEMENT NEAR RETAINING WALL**

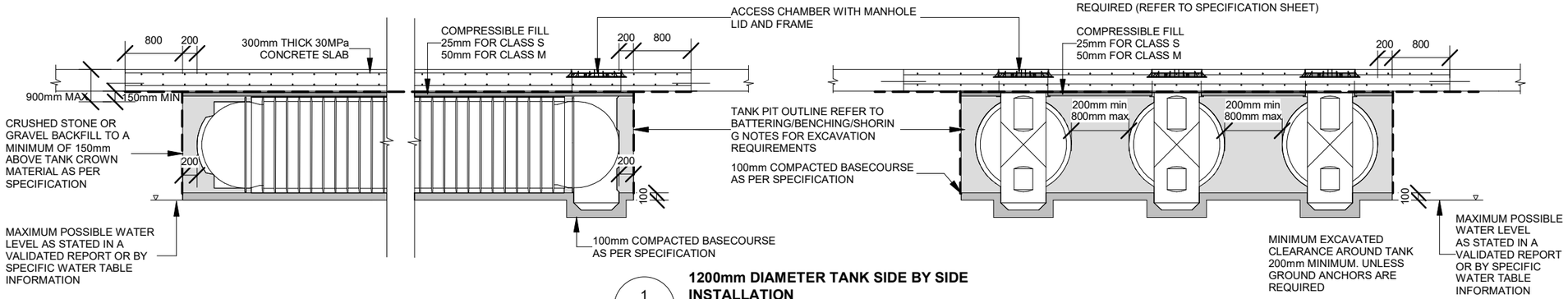


1 **1200mm DIAMETER TANK SIDE BY SIDE INSTALLATION**

IF DRIVEWAY IS EXISTING:
SCABBLE EDGE AND TIE WITH D12 DRILL AND EPOXY STARTERS AT 400mm CRS. 100mm MIN EMBEDMENT DEPTH INTO EXISTING SLAB, LAP 600mm INTO NEW TOPPING SLAB

IF DRIVEWAY IS NEW:
LAP TANK TOPPING STEEL WITH GENERAL DRIVEWAY REINFORCING. FULL LAP LENGTH REQUIRED (REFER TO SPECIFICATION SHEET)

NOTES:
- ALL DIMENSIONS IN MILLIMETRES UNO
- REFER TO STRUCTURAL SPECIFICATIONS SHEET OR CONCRETE REINFORCING & OTHER NOTES
- ALL LEVELS SHALL BE CONFIRMED BY THE CONTRACTOR PRIOR TO COMMENCEMENT OF WORK.
- ALL UNDERGROUND SERVICES SHALL BE CONFIRMED, LOCATED AND MARKED PRIOR TO ANY EXCAVATION WORKS,

- DEVAN PLASTICS LTD SHALL BE NOTIFIED IMMEDIATELY SHOULD ANY OF THE DESIGN PARAMETERS SHOWN ON THE DRAWINGS NOT BE ACHIEVABLE.

- REFER TO DEVAN PLASTICS LTD FOR MAXIMUM BURIAL DEPTH ALLOWANCES.

- TEMPORARY SUPPORT AND SHORING TO BE CARRIED OUT IN ACCORDANCE WITH WORKSAFE EXCAVATION SAFETY GUIDELINES.

- stormVAULT INSTALLATION TO BE CARRIED OUT IN CONJUCTION WITH DEVAN PRODUCT INFORMATION GUIDE AND THESE DRAWINGS

SOIL CONDITIONS
SITE SOIL CONDITIONS ALLOW FOR EXPANSIVE SOIL UP TO AND INCLUDING CLASS M AS DEFINED IN AS2870, PROVIDED AN ULTIMATE BEARING CAPACITY OF 300 KPA IS ACHIEVABLE FOR THE SUBGRADE DIRECTLY SUPPORTING THE SLAB AND THE BASECOURSE. NO ALLOWANCE FOR LIQUIFIABLE SOIL, OR SOIL WITH SLOPE STABILITY ISSUES. IT IS THE RESPONSIBILITY OF THE CONTRACTOR AND THE OWNER TO VERIFY THE SITE CONDITIONS PRIOR TO COMMENCING THE CONSTRUCTION WORKS.

TANK LOCATION - PROXIMITY TO NEARBY STRUCTURES:
IT IS THE CONTRACTOR AND OWNER'S RESPONSIBILITY TO ENSURE THAT THE LOCATION OF THE TANK WITH RESPECT TO ADJACENT STRUCTURES COMPLY WITH THE LIMITS AND RESTRICTIONS SET OUT IN THESE DRAWINGS. DEVAN PLASTICS LTD SHALL BE NOTIFIED IMMEDIATELY IF THOSE LIMITS ARE NOT ACHIEVABLE.

BACKFILL AND BASECOURSE:
GAP 10 or GAP 20 SHALL BE USED FOR BACKFILL AND BASECOURSE MATERIAL. ALTERNATIVE MATERIAL SHALL NOT BE USED WITHOUT THE WRITTEN APPROVAL OF DEVAN PLASTICS LTD.

CONTRACTOR SHALL BACKFILL LIFTS OF 150MM. THE CONTRACTOR SHALL USE THE APPROPRIATE TOOLS AND CONSTRUCTION TECHNIQUES TO ENSURE ALL VOIDS ARE FILLED ALONG THE FULL LENGTH OF THE TANK, ENSURING SUFFICIENT SUPPORT.

BATTERING/BENCHING/SHORING:
MANAGING THE STABILITY OF THE TRENCH DURING EXCAVATION IS THE RESPONSIBILITY OF THE CONTRACTOR, AND SHALL BE CARRIED OUT WITH THE RELEVANT GUIDELINES AND BEST PRACTICES IN ACCORDANCE WITH THE HEALTH AND SAFETY AT WORK ACT 2015. THIS INCLUDES, BUT NOT LIMITED TO, ANY EXCAVATIONS DEEPER THAN 1.5M. THE CONTRACTOR SHALL CONSULT WITH SUITABLE INDUSTRY PROFESIONALS SHOULD FURTHER GUIDANCE BE REQUIRED FOR BENCHING, BATTERING, AND SHORING.

LOADING:
COMMERCIAL VEHICLES WITH MAX AXLE LOAD OF 120kN (NZTA HN LOADING)
CONTRACTOR AND TANK OWNER TO ENSURE TANK POSITION DOES NOT EXPOSE THE TANK TO LOADS GREATER THAN SPECIFIED IN THESE DRAWINGS FOR THE DESIGN LIFE OF THE UNIT.

NOTE:
THIS SHEET IS FOR THE INSTALLATION OF TANKS ABOVE MAXIMUM POSSIBLE WATER TABLE LEVELS OR FOR INSTALLATIONS NOT REQUIRING ANCHOR PADS AS DETERMINED THROUGH "DEVAN PLASTICS stormVAULT UNDERGROUND CYLINDRICAL TANKS TOOLBOX VERSION 1.0 (OR HIGHER) CALCULATOR". IF TANKS ARE BEING INSTALLED ABOVE MAXIMUM POSSIBLE WATER TABLE LEVELS THEN SITE SPECIFIC REPORTS OR WATER TABLE INFORMATION MUST PROVE THE WATER LEVEL CAN NOT POSSIBLY RISE ABOVE THE BOTTOM OF THE EXCAVATION. IF THIS INFORMATION CAN NOT BE PROVIDED, REFER TO SHEET 059-003-S-603. IT IS THE RESPONSIBILITY OF THE CONTRACTOR AND OWNER TO ENSURE CORRECT TANK INSTALLATION IN ACCORDANCE WITH THE DEVAN INSTALLATION GUIDES AND DRAWINGS.

| REV | ISSUE | Date |
|---|---|---|
| 1 | FOR CONSTRUCTION | 16.04.25 |
| 0 | FOR CONSTRUCTION | 01.11.24 |

| | | |
|---|---|---|
| DESIGNED | SK | Contact SENZ when in doubt. Refer to Architectural Drawings for set out, do not scale Structural Engineering Drawings |
| CHECKED | SK/RR | Business Address: L1, 52 Highbrook Drive, East Tamaki, Auckland 2013 |
| DRAWN | AS | Phone Number: +64 9 275 6029<br>Evening Number: +64 9 889 9350<br>E-mail Address: info@structural-engs.co.nz<br>Website: www.structural-engs.co.nz |

SENZ Structural Engineers New Zealand

CLIENT DEVAN

PROJECT
**DEVAN PLASTICS STANDARD DESIGN FOR UNDERGROUND TANKS**

SHEET TITLE
**HN COMMERCIAL TRAFFIC LOADING - TRIPLE TANK INSTALLATION INSTRUCTIONS WITHOUT ANCHORS- SLAB ON CLASS M EXPANSIVE SOIL**

FOR CONSTRUCTION

| SCALE | Drawing No. | REVISION |
|---|---|---|
| As indicated @ A3<br>1:A3x2 @ A1 | 059-003 -S-602 | 1 |

NOTE:
stormVAULT 800mm TANKS MAY BE DIRECTLY SUBSTITUTED WITH THE stormVAULT 1200mm TANKS, PROVIDED ALL DIMENSIONAL CONSTRAINTS IN THESE DRAWINGS ARE FOLLOWED.

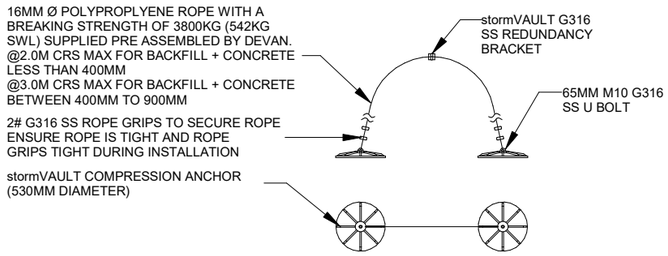


1 S-603 **DETAIL**

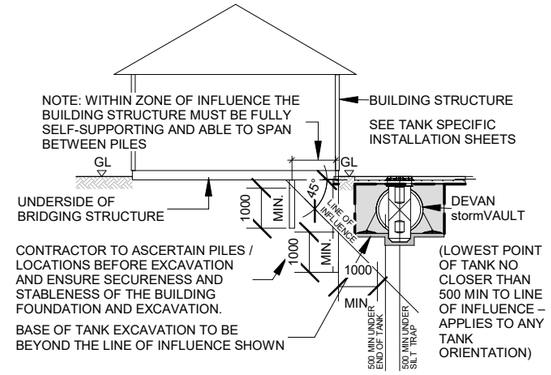


3 **TANK PLACEMENT NEAR PILED FOUNDATIONS**

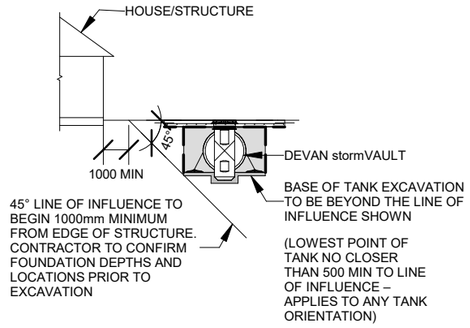


4 **TANK PLACEMENT NEAR BUILDING STRUCTURE**

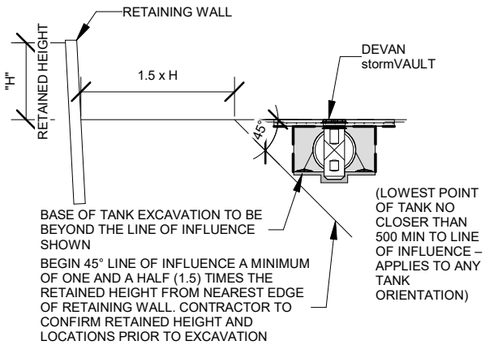


5 **TANK PLACEMENT NEAR RETAINING WALL**

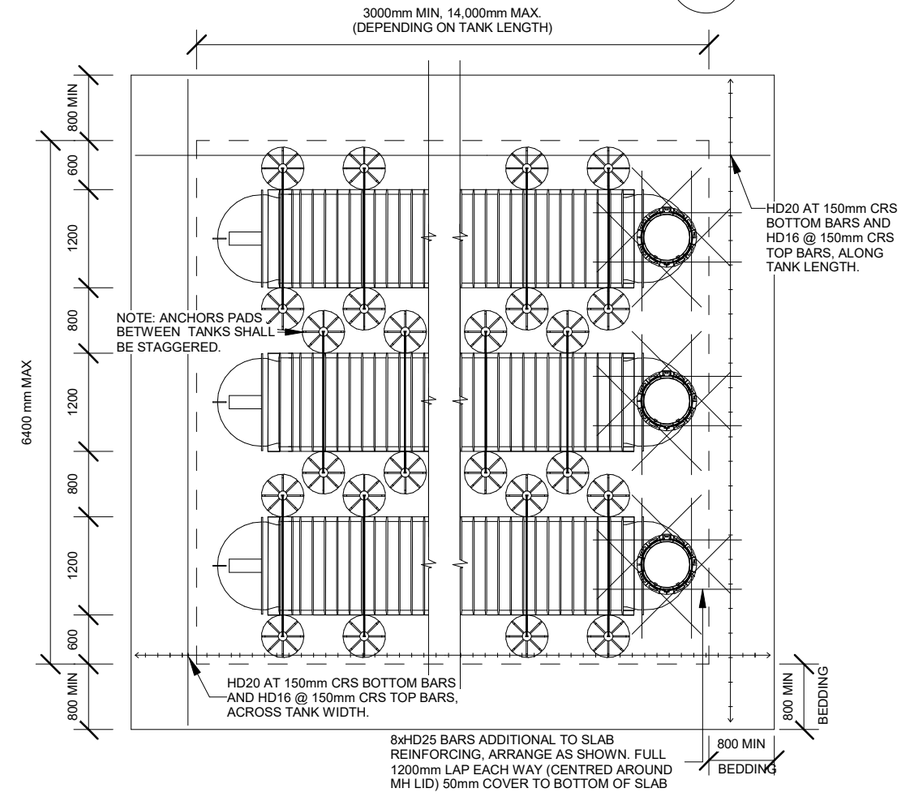


IF DRIVEWAY IS EXISTING:
SCABBLE EDGE AND TIE WITH D12 DRILL AND EPOXY STARTERS AT 400mm CRS. 100mm MIN EMBEDMENT DEPTH INTO EXISTING SLAB, LAP 600mm INTO NEW TOPPING SLAB

IF DRIVEWAY IS NEW:
LAP TANK TOPPING STEEL WITH GENERAL DRIVEWAY REINFORCING. FULL LAP LENGTH REQUIRED (REFER TO SPECIFICATION SHEET)

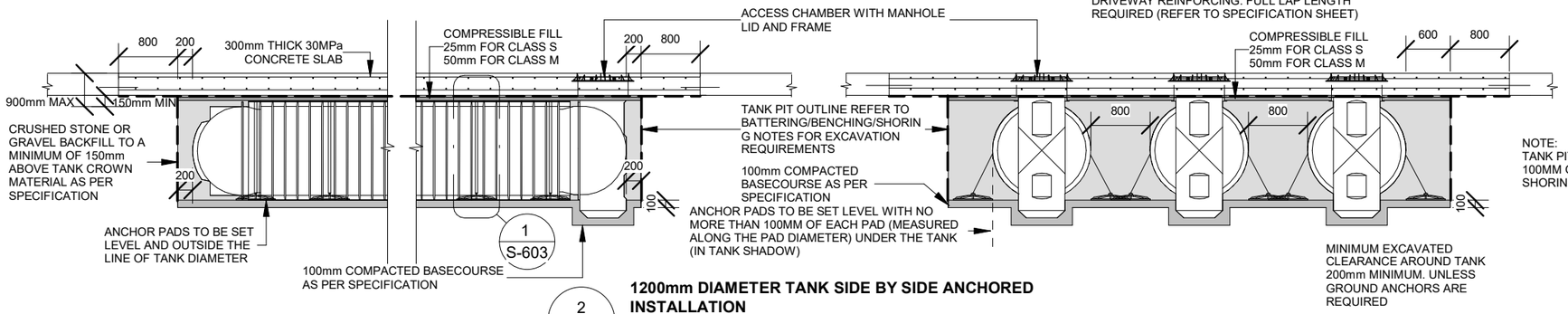


NOTE:
TANK PIT MAY BE WIDENED BY 100MM ON EITHER SIDE TO FIT SHORING MODULES IF REQUIRED

2 **1200mm DIAMETER TANK SIDE BY SIDE ANCHORED INSTALLATION**

NOTES:
- ALL DIMENSIONS IN MILLIMETRES UNO
- REFER TO STRUCTURAL SPECIFICATIONS SHEET OR CONCRETE REINFORCING & OTHER NOTES
- ALL LEVELS SHALL BE CONFIRMED BY THE CONTRACTOR PRIOR TO COMMENCEMENT OF WORK.
- ALL UNDERGROUND SERVICES SHALL BE CONFIRMED, LOCATED AND MARKED PRIOR TO ANY EXCAVATION WORKS,

- DEVAN PLASTICS LTD SHALL BE NOTIFIED IMMEDIATELY SHOULD ANY OF THE DESIGN PARAMETERS SHOWN ON THE DRAWINGS NOT BE ACHIEVABLE.

- REFER TO DEVAN PLASTICS LTD FOR MAXIMUM BURIAL DEPTH ALLOWANCES.

- TEMPORARY SUPPORT AND SHORING TO BE CARRIED OUT IN ACCORDANCE WITH WORKSAFE EXCAVATION SAFETY GUIDELINES.

- stormVAULT INSTALLATION TO BE CARRIED OUT IN CONJUCTION WITH DEVAN PRODUCT INFORMATION GUIDE AND THESE DRAWINGS

SOIL CONDITIONS
SITE SOIL CONDITIONS ALLOW FOR EXPANSIVE SOIL UP TO AND INCLUDING CLASS M AS DEFINED IN AS2870, PROVIDED AN ULTIMATE BEARING CAPACITY OF 300 KPA IS ACHIEVABLE FOR THE SUBGRADE DIRECTLY SUPPORTING THE SLAB AND THE BASECOURSE. NO ALLOWANCE FOR LIQUIFIABLE SOIL, OR SOIL WITH SLOPE STABILITY ISSUES. IT IS THE RESPONSIBILITY OF THE CONTRACTOR AND THE OWNER TO VERIFY THE SITE CONDITIONS PRIOR TO COMMENCING THE CONSTRUCTION WORKS.

TANK LOCATION - PROXIMITY TO NEARBY STRUCTURES:
IT IS THE CONTRACTOR AND OWNER'S RESPONSIBILITY TO ENSURE THAT THE LOCATION OF THE TANK WITH RESPECT TO ADJACENT STRUCTURES COMPLY WITH THE LIMITS AND RESTRICTIONS SET OUT IN THESE DRAWINGS. DEVAN PLASTICS LTD SHALL BE NOTIFIED IMMEDIATELY IF THOSE LIMITS ARE NOT ACHIEVABLE.

BACKFILL AND BASECOURSE:
GAP 10 or GAP 20 SHALL BE USED FOR BACKFILL AND BASECOURSE MATERIAL. ALTERNATIVE MATERIAL SHALL NOT BE USED WITHOUT THE WRITTEN APPROVAL OF DEVAN PLASTICS LTD.

CONTRACTOR SHALL BACKFILL LIFTS OF 150MM. THE CONTRACTOR SHALL USE THE APPROPRIATE TOOLS AND CONSTRUCTION TECHNIQUES TO ENSURE ALL VOIDS ARE FILLED ALONG THE FULL LENGTH OF THE TANK, ENSURING SUFFICIENT SUPPORT.

BATTERING/BENCHING/SHORING:
MANAGING THE STABILITY OF THE TRENCH DURING EXCAVATION IS THE RESPONSIBILITY OF THE CONTRACTOR, AND SHALL BE CARRIED OUT WITH THE RELEVANT GUIDELINES AND BEST PRACTICES IN ACCORDANCE WITH THE HEALTH AND SAFETY AT WORK ACT 2015. THIS INCLUDES, BUT NOT LIMITED TO, ANY EXCAVATIONS DEEPER THAN 1.5M. THE CONTRACTOR SHALL CONSULT WITH SUITABLE INDUSTRY PROFESIONALS SHOULD FURTHER GUIDANCE BE REQUIRED FOR BENCHING, BATTERING, AND SHORING.

LOADING:
COMMERCIAL VEHICLES WITH MAX AXLE LOAD OF 120kN (NZTA HN LOADING)
CONTRACTOR AND TANK OWNER TO ENSURE TANK POSITION DOES NOT EXPOSE THE TANK TO LOADS GREATER THAN SPECIFIED IN THESE DRAWINGS FOR THE DESIGN LIFE OF THE UNIT.

NOTE:
THIS SHEET IS FOR THE INSTALLATION OF TANKS REQUIRING ANCHOR PADS AS DETERMINED THROUGH "DEVAN PLASTICS stormVAULT UNDERGROUND CYLINDRICAL TANKS TOOLBOX VERSION 1.0 (OR HIGHER) CALCULATOR". IT IS THE RESPONSIBILITY OF THE CONTRACTOR AND OWNER TO ENSURE CORRECT TANK INSTALLATION IN ACCORDANCE WITH THE DEVAN INSTALLATION GUIDES AND DRAWINGS.

| REV | ISSUE | Date |
|---|---|---|
| 1 | FOR CONSTRUCTION | 16.04.25 |
| 0 | FOR CONSTRUCTION | 01.11.24 |

DESIGNED: SK
CHECKED: SK/RR
DRAWN: AS

Contact SENZ when in doubt. Refer to Architectural Drawings for set out, do not scale Structural Engineering Drawings


Business Address: L1, 52 Highbrook Drive, East Tamaki, Auckland 2013
Phone Number: +64 9 275 6029
Evening Number: +64 9 889 9350
E-mail Address: info@structural-engs.co.nz
Website: www.structural-engs.co.nz


SENZ Structural Engineers New Zealand

CLIENT: DEVAN

PROJECT
**DEVAN PLASTICS STANDARD DESIGN FOR UNDERGROUND TANKS**

FOR CONSTRUCTION

SHEET TITLE
**HN COMMERCIAL TRAFFIC LOADING - TRIPLE TANK INSTALLATION INSTRUCTIONS WITH ANCHORS - SLAB ON CLASS M EXPANSIVE SOIL**

SCALE: As indicated @ A3; 1:A3x2 @ A1
Drawing No.: 059-003 -S-603
REVISION: 1

NOTE:
stormVAULT 800mm TANKS MAY BE DIRECTLY SUBSTITUTED WITH THE stormVAULT 1200mm TANKS, PROVIDED ALL DIMENSIONAL CONSTRAINTS IN THESE DRAWINGS ARE FOLLOWED.

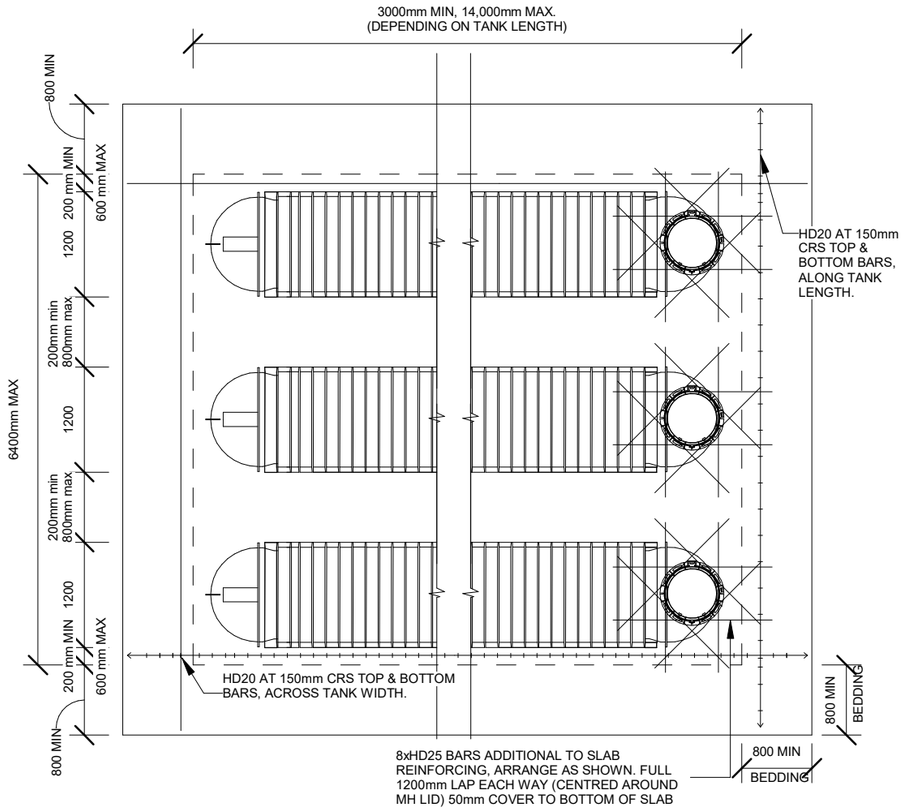


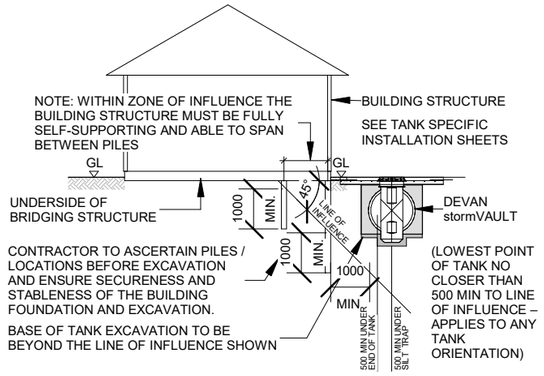


2 **TANK PLACEMENT NEAR PILED FOUNDATIONS**

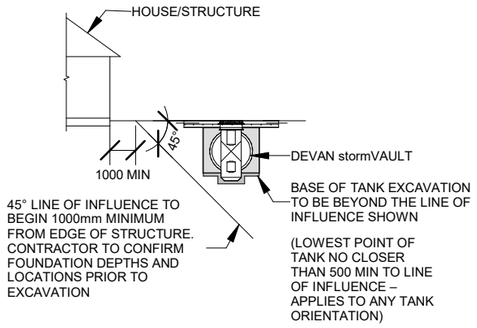


3 **TANK PLACEMENT NEAR BUILDING STRUCTURE**

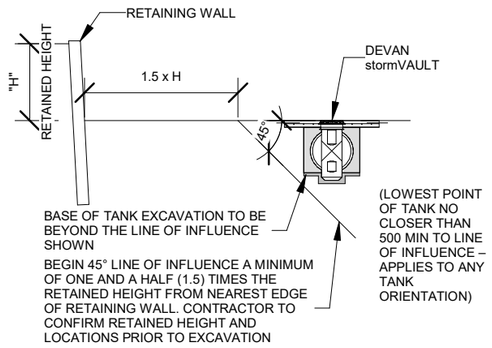


4 **TANK PLACEMENT NEAR RETAINING WALL**

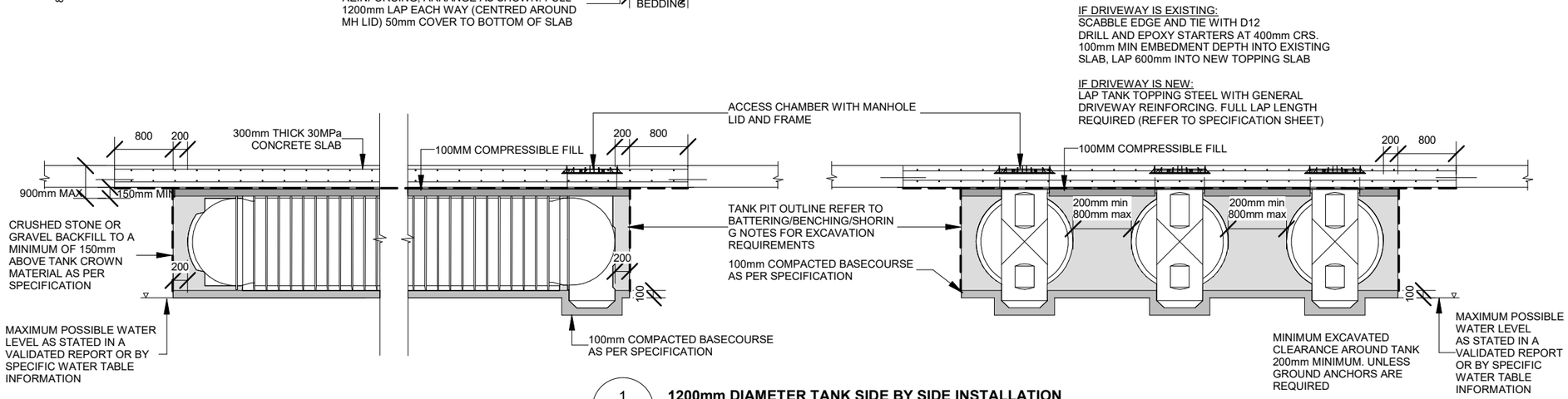


1 **1200mm DIAMETER TANK SIDE BY SIDE INSTALLATION**

NOTES:
- ALL DIMENSIONS IN MILLIMETRES UNO
- REFER TO STRUCTURAL SPECIFICATIONS SHEET OR CONCRETE REINFORCING & OTHER NOTES
- ALL LEVELS SHALL BE CONFIRMED BY THE CONTRACTOR PRIOR TO COMMENCEMENT OF WORK.
- ALL UNDERGROUND SERVICES SHALL BE CONFIRMED, LOCATED AND MARKED PRIOR TO ANY EXCAVATION WORKS,

- DEVAN PLASTICS LTD SHALL BE NOTIFIED IMMEDIATELY SHOULD ANY OF THE DESIGN PARAMETERS SHOWN ON THE DRAWINGS NOT BE ACHIEVABLE.

- REFER TO DEVAN PLASTICS LTD FOR MAXIMUM BURIAL DEPTH ALLOWANCES.

- TEMPORARY SUPPORT AND SHORING TO BE CARRIED OUT IN ACCORDANCE WITH WORKSAFE EXCAVATION SAFETY GUIDELINES.

- stormVAULT INSTALLATION TO BE CARRIED OUT IN CONJUCTION WITH DEVAN PRODUCT INFORMATION GUIDE AND THESE DRAWINGS

SOIL CONDITIONS
SITE SOIL CONDITIONS ALLOW FOR EXPANSIVE SOIL UP TO AND INCLUDING CLASS H2 AS DEFINED IN AS2870, PROVIDED AN ULTIMATE BEARING CAPACITY OF 300 KPA IS ACHIEVABLE FOR THE SUBGRADE DIRECTLY SUPPORTING THE SLAB AND THE BASECOURSE. NO ALLOWANCE FOR LIQUIFIABLE SOIL, OR SOIL WITH SLOPE STABILITY ISSUES. IT IS THE RESPONSIBILITY OF THE CONTRACTOR AND THE OWNER TO VERIFY THE SITE CONDITIONS PRIOR TO COMMENCING THE CONSTRUCTION WORKS.

TANK LOCATION - PROXIMITY TO NEARBY STRUCTURES:
IT IS THE CONTRACTOR AND OWNER'S RESPONSIBILITY TO ENSURE THAT THE LOCATION OF THE TANK WITH RESPECT TO ADJACENT STRUCTURES COMPLY WITH THE LIMITS AND RESTRICTIONS SET OUT IN THESE DRAWINGS. DEVAN PLASTICS LTD SHALL BE NOTIFIED IMMEDIATELY IF THOSE LIMITS ARE NOT ACHIEVABLE.

BACKFILL AND BASECOURSE:
GAP 10 or GAP 20 SHALL BE USED FOR BACKFILL AND BASECOURSE MATERIAL. ALTERNATIVE MATERIAL SHALL NOT BE USED WITHOUT THE WRITTEN APPROVAL OF DEVAN PLASTICS LTD.

CONTRACTOR SHALL BACKFILL LIFTS OF 150MM. THE CONTRACTOR SHALL USE THE APPROPRIATE TOOLS AND CONSTRUCTION TECHNIQUES TO ENSURE ALL VOIDS ARE FILLED ALONG THE FULL LENGTH OF THE TANK, ENSURING SUFFICIENT SUPPORT.

BATTERING/BENCHING/SHORING:
MANAGING THE STABILITY OF THE TRENCH DURING EXCAVATION IS THE RESPONSIBILITY OF THE CONTRACTOR, AND SHALL BE CARRIED OUT WITH THE RELEVANT GUIDELINES AND BEST PRACTICES IN ACCORDANCE WITH THE HEALTH AND SAFETY AT WORK ACT 2015. THIS INCLUDES, BUT NOT LIMITED TO, ANY EXCAVATIONS DEEPER THAN 1.5M. THE CONTRACTOR SHALL CONSULT WITH SUITABLE INDUSTRY PROFESIONALS SHOULD FURTHER GUIDANCE BE REQUIRED FOR BENCHING, BATTERING, AND SHORING.

LOADING:
COMMERCIAL VEHICLES WITH MAX AXLE LOAD OF 120kN (NZTA HN LOADING)
CONTRACTOR AND TANK OWNER TO ENSURE TANK POSITION DOES NOT EXPOSE THE TANK TO LOADS GREATER THAN SPECIFIED IN THESE DRAWINGS FOR THE DESIGN LIFE OF THE UNIT.

NOTE:
THIS SHEET IS FOR THE INSTALLATION OF TANKS ABOVE MAXIMUM POSSIBLE WATER TABLE LEVELS OR FOR INSTALLATIONS NOT REQUIRING ANCHOR PADS AS DETERMINED THROUGH "DEVAN PLASTICS stormVAULT UNDERGROUND CYLINDRICAL TANKS TOOLBOX VERSION 1.0 (OR HIGHER) CALCULATOR". IF TANKS ARE BEING INSTALLED ABOVE MAXIMUM POSSIBLE WATER TABLE LEVELS THEN SITE SPECIFIC REPORTS OR WATER TABLE INFORMATION MUST PROVE THE WATER LEVEL CAN NOT POSSIBLY RISE ABOVE THE BOTTOM OF THE EXCAVATION. IF THIS INFORMATION CAN NOT BE PROVIDED, REFER TO SHEET 059-003-S-605. IT IS THE RESPONSIBILITY OF THE CONTRACTOR AND OWNER TO ENSURE CORRECT TANK INSTALLATION IN ACCORDANCE WITH THE DEVAN INSTALLATION GUIDES AND DRAWINGS.

| REV | ISSUE | Date |
|---|---|---|
| 1 | FOR CONSTRUCTION | 16.04.25 |
| 0 | FOR CONSTRUCTION | 01.11.24 |

| | |
|---|---|
| DESIGNED | SK |
| CHECKED | SK/RR |
| DRAWN | AS |

Contact SENZ when in doubt. Refer to Architectural Drawings for set out, do not scale Structural Engineering Drawings


Business Address: L1, 52 Highbrook Drive, East Tamaki, Auckland 2013
Phone Number: +64 9 275 6029
Evening Number: +64 9 889 9350
E-mail Address: info@structural-engs.co.nz
Website: www.structural-engs.co.nz


SENZ Structural Engineers New Zealand

CLIENT DEVAN

PROJECT
**DEVAN PLASTICS STANDARD DESIGN FOR UNDERGROUND TANKS**

FOR CONSTRUCTION

SHEET TITLE
**HN COMMERCIAL TRAFFIC LOADING - TRIPLE TANK INSTALLATION INSTRUCTIONS WITHOUT ANCHORS - SLAB ON CLASS H2 EXPANSIVE SOIL**

| SCALE | Drawing No. | REVISION |
|---|---|---|
| As indicated @ A3<br>1:A3x2 @ A1 | 059-003 -S-604 | 1 |

NOTE:
stormVAULT 800mm TANKS MAY BE DIRECTLY SUBSTITUTED WITH THE stormVAULT 1200mm TANKS, PROVIDED ALL DIMENSIONAL CONSTRAINTS IN THESE DRAWINGS ARE FOLLOWED.

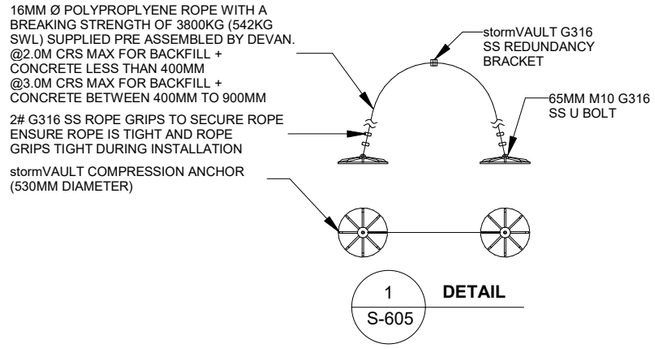


1 S-605 **DETAIL**

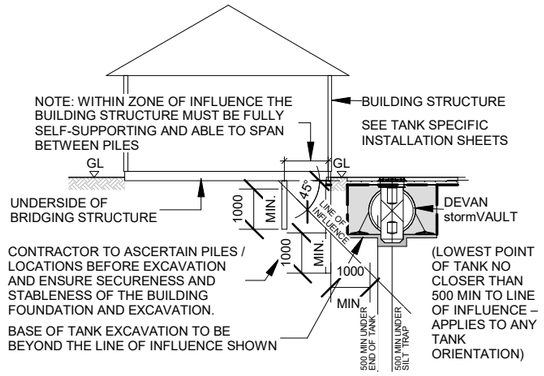


3 **TANK PLACEMENT NEAR PILED FOUNDATIONS**

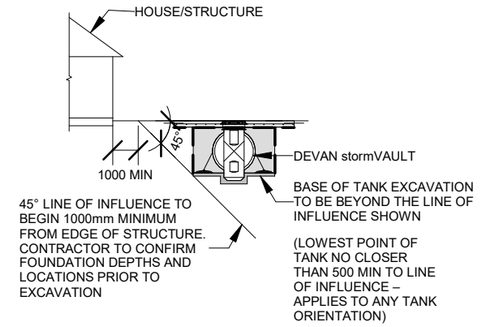


4 **TANK PLACEMENT NEAR BUILDING STRUCTURE**

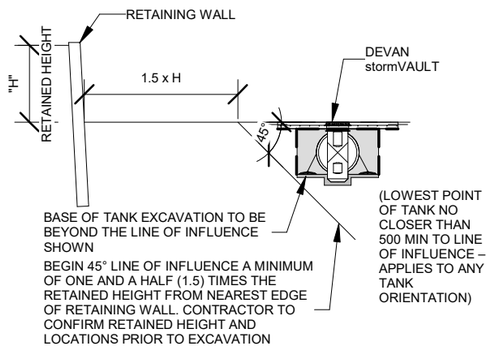


5 **TANK PLACEMENT NEAR RETAINING WALL**

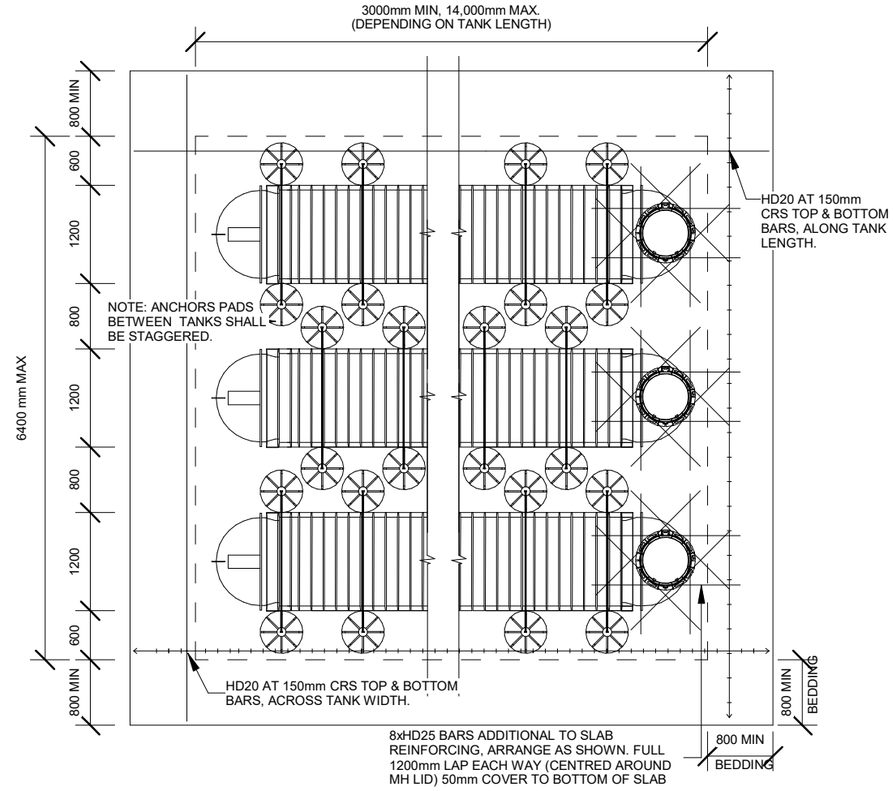


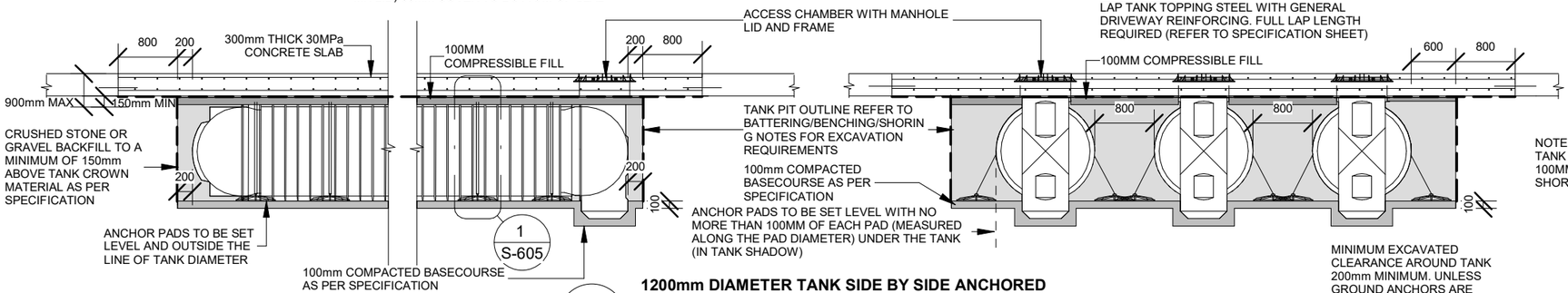


NOTE:
TANK PIT MAY BE WIDENED BY 100MM ON EITHER SIDE TO FIT SHORING MODULES IF REQUIRED

2 **1200mm DIAMETER TANK SIDE BY SIDE ANCHORED INSTALLATION**

NOTES:
- ALL DIMENSIONS IN MILLIMETRES UNO
- REFER TO STRUCTURAL SPECIFICATIONS SHEET OR CONCRETE REINFORCING & OTHER NOTES
- ALL LEVELS SHALL BE CONFIRMED BY THE CONTRACTOR PRIOR TO COMMENCEMENT OF WORK.
- ALL UNDERGROUND SERVICES SHALL BE CONFIRMED, LOCATED AND MARKED PRIOR TO ANY EXCAVATION WORKS,

- DEVAN PLASTICS LTD SHALL BE NOTIFIED IMMEDIATELY SHOULD ANY OF THE DESIGN PARAMETERS SHOWN ON THE DRAWINGS NOT BE ACHIEVABLE.

- REFER TO DEVAN PLASTICS LTD FOR MAXIMUM BURIAL DEPTH ALLOWANCES.

- TEMPORARY SUPPORT AND SHORING TO BE CARRIED OUT IN ACCORDANCE WITH WORKSAFE EXCAVATION SAFETY GUIDELINES.

- stormVAULT INSTALLATION TO BE CARRIED OUT IN CONJUCTION WITH DEVAN PRODUCT INFORMATION GUIDE AND THESE DRAWINGS

SOIL CONDITIONS
SITE SOIL CONDITIONS ALLOW FOR EXPANSIVE SOIL UP TO AND INCLUDING CLASS H2 AS DEFINED IN AS2870, PROVIDED AN ULTIMATE BEARING CAPACITY OF 300 KPA IS ACHIEVABLE FOR THE SUBGRADE DIRECTLY SUPPORTING THE SLAB AND THE BASECOURSE. NO ALLOWANCE FOR LIQUIFIABLE SOIL, OR SOIL WITH SLOPE STABILITY ISSUES. IT IS THE RESPONSIBILITY OF THE CONTRACTOR AND THE OWNER TO VERIFY THE SITE CONDITIONS PRIOR TO COMMENCING THE CONSTRUCTION WORKS.

TANK LOCATION - PROXIMITY TO NEARBY STRUCTURES:
IT IS THE CONTRACTOR AND OWNER'S RESPONSIBILITY TO ENSURE THAT THE LOCATION OF THE TANK WITH RESPECT TO ADJACENT STRUCTURES COMPLY WITH THE LIMITS AND RESTRICTIONS SET OUT IN THESE DRAWINGS. DEVAN PLASTICS LTD SHALL BE NOTIFIED IMMEDIATELY IF THOSE LIMITS ARE NOT ACHIEVABLE.

BACKFILL AND BASECOURSE:
GAP 10 or GAP 20 SHALL BE USED FOR BACKFILL AND BASECOURSE MATERIAL. ALTERNATIVE MATERIAL SHALL NOT BE USED WITHOUT THE WRITTEN APPROVAL OF DEVAN PLASTICS LTD.

CONTRACTOR SHALL BACKFILL LIFTS OF 150MM. THE CONTRACTOR SHALL USE THE APPROPRIATE TOOLS AND CONSTRUCTION TECHNIQUES TO ENSURE ALL VOIDS ARE FILLED ALONG THE FULL LENGTH OF THE TANK, ENSURING SUFFICIENT SUPPORT.

BATTERING/BENCHING/SHORING:
MANAGING THE STABILITY OF THE TRENCH DURING EXCAVATION IS THE RESPONSIBILITY OF THE CONTRACTOR, AND SHALL BE CARRIED OUT WITH THE RELEVANT GUIDELINES AND BEST PRACTICES IN ACCORDANCE WITH THE HEALTH AND SAFETY AT WORK ACT 2015. THIS INCLUDES, BUT NOT LIMITED TO, ANY EXCAVATIONS DEEPER THAN 1.5M. THE CONTRACTOR SHALL CONSULT WITH SUITABLE INDUSTRY PROFESIONALS SHOULD FURTHER GUIDANCE BE REQUIRED FOR BENCHING, BATTERING, AND SHORING.

LOADING:
COMMERCIAL VEHICLES WITH MAX AXLE LOAD OF 120kN (NZTA HN LOADING)
CONTRACTOR AND TANK OWNER TO ENSURE TANK POSITION DOES NOT EXPOSE THE TANK TO LOADS GREATER THAN SPECIFIED IN THESE DRAWINGS FOR THE DESIGN LIFE OF THE UNIT.

NOTE:
THIS SHEET IS FOR THE INSTALLATION OF TANKS REQUIRING ANCHOR PADS AS DETERMINED THROUGH "DEVAN PLASTICS stormVAULT UNDERGROUND CYLINDRICAL TANKS TOOLBOX VERSION 1.0 (OR HIGHER) CALCULATOR". IT IS THE RESPONSIBILITY OF THE CONTRACTOR AND OWNER TO ENSURE CORRECT TANK INSTALLATION IN ACCORDANCE WITH THE DEVAN INSTALLATION GUIDES AND DRAWINGS.

| REV | ISSUE | Date |
|---|---|---|
| 1 | FOR CONSTRUCTION | 16.04.25 |
| 0 | FOR CONSTRUCTION | 01.11.24 |

| | | |
|---|---|---|
| DESIGNED | SK | Contact SENZ when in doubt. Refer to Architectural Drawings for set out, do not scale Structural Engineering Drawings |
| CHECKED | SK/RR | Business Address: L1, 52 Highbrook Drive, East Tamaki, Auckland 2013<br>Phone Number: +64 9 275 6029<br>Evening Number: +64 9 889 9350<br>E-mail Address: info@structural-engs.co.nz<br>Website: www.structural-engs.co.nz |
| DRAWN | AS | |

SENZ Structural Engineers New Zealand

CLIENT DEVAN

PROJECT
**DEVAN PLASTICS STANDARD DESIGN FOR UNDERGROUND TANKS**

SHEET TITLE
**HN COMMERCIAL TRAFFIC LOADING - TRIPLE TANK INSTALLATION INSTRUCTIONS WITH ANCHORS - SLAB ON CLASS H2 EXPANSIVE SOIL**

FOR CONSTRUCTION

| SCALE | Drawing No. | REVISION |
|---|---|---|
| As indicated @ A3<br>1:A3x2 @ A1 | 059-003 -S-605 | 1 |