Paradigm 900x900

SKU: QU-PAR

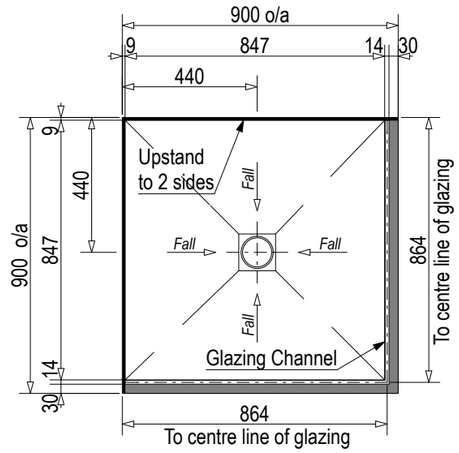

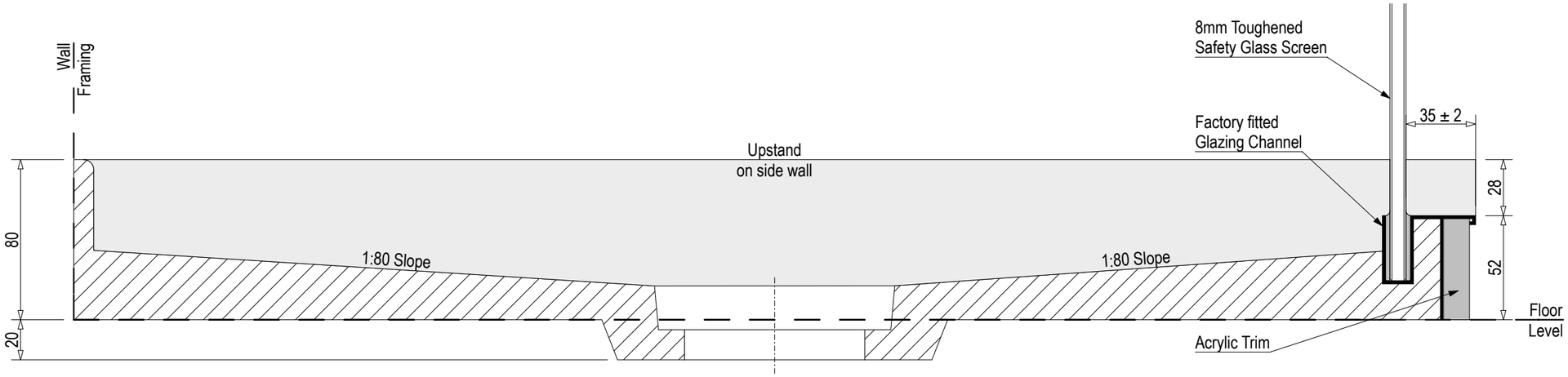

Note: Verify exact shower base dimensions on site

Screen Options:

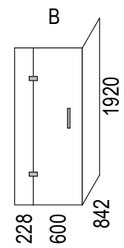

Screens are reversible

For more product information go to:
www.atlantis.co.nz/shop/products-all/paradigm-900x900/

For installation instructions go to:
www.atlantis.co.nz/trade/installation/

Quub

atlantis

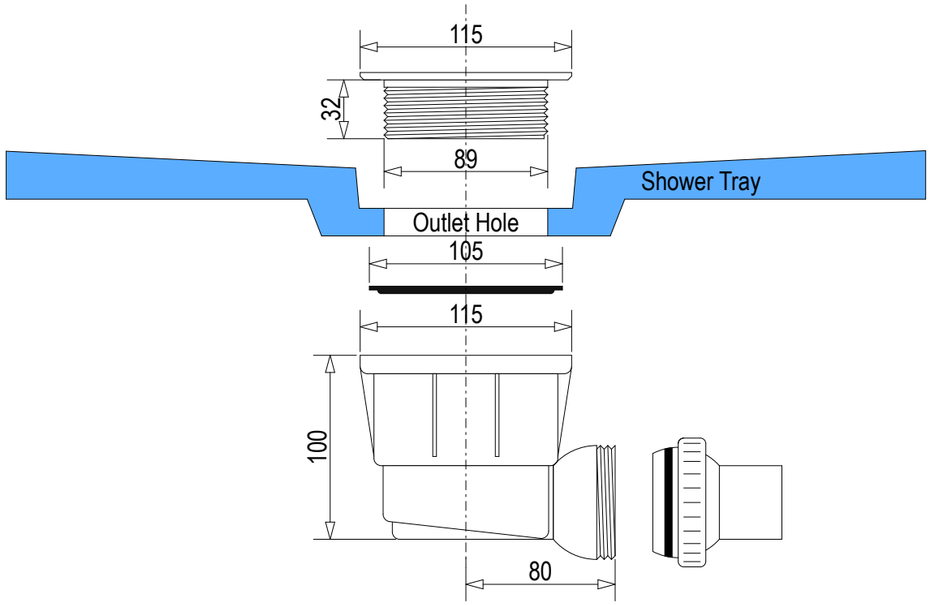
115
32
89
Shower Tray
Outlet Hole
105
115
100
80

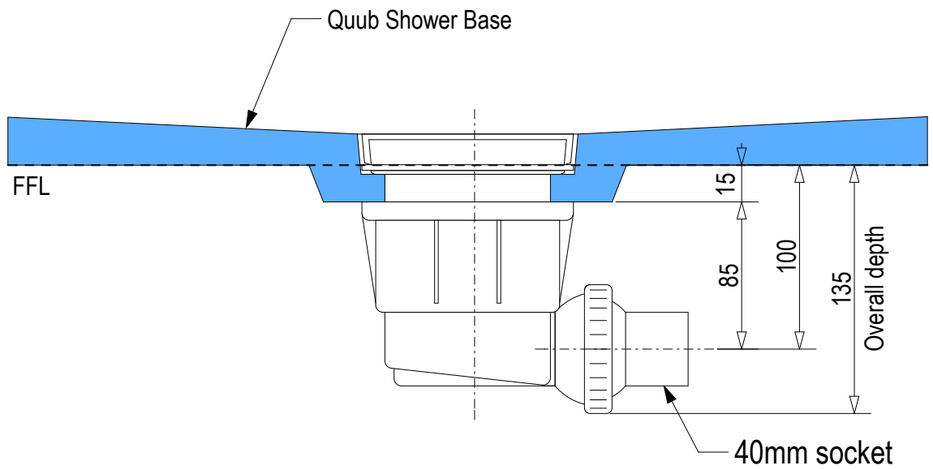
Quub Shower Base
FFL
15
85
100
135
Overall depth
40mm socket

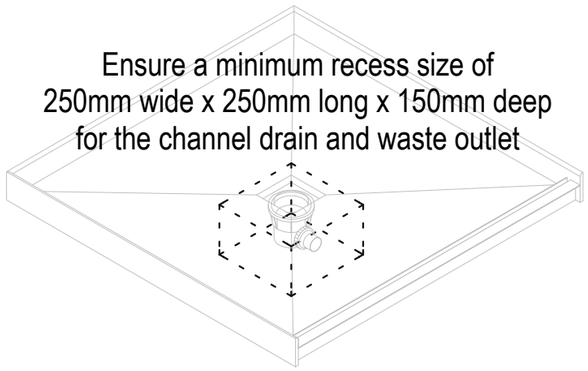
Ensure a minimum recess size of
250mm wide x 250mm long x 150mm deep
for the channel drain and waste outlet

Base Profile 2 - Timber Floor

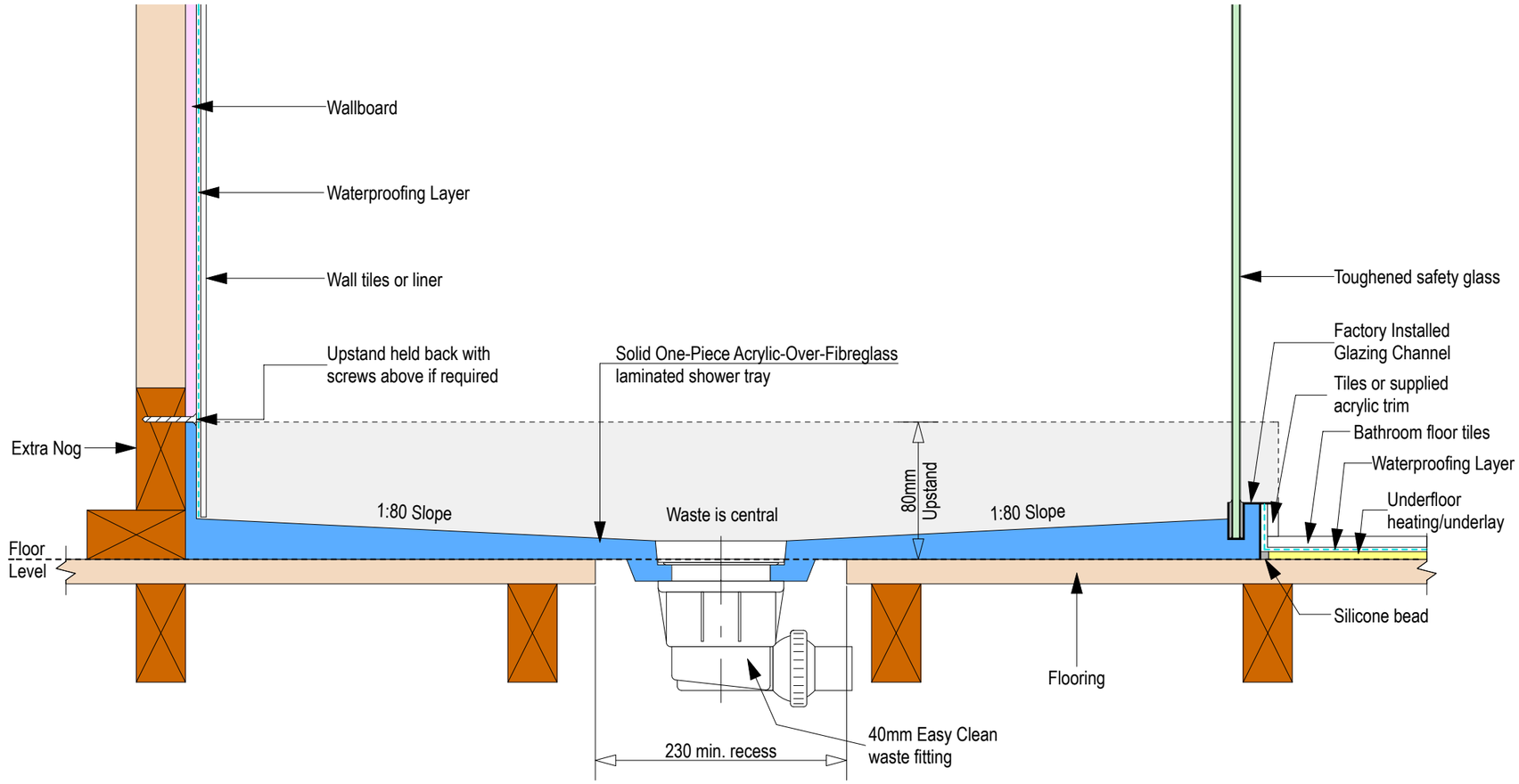

Quub

atlantis

Base Profile 1 - Concrete Floor

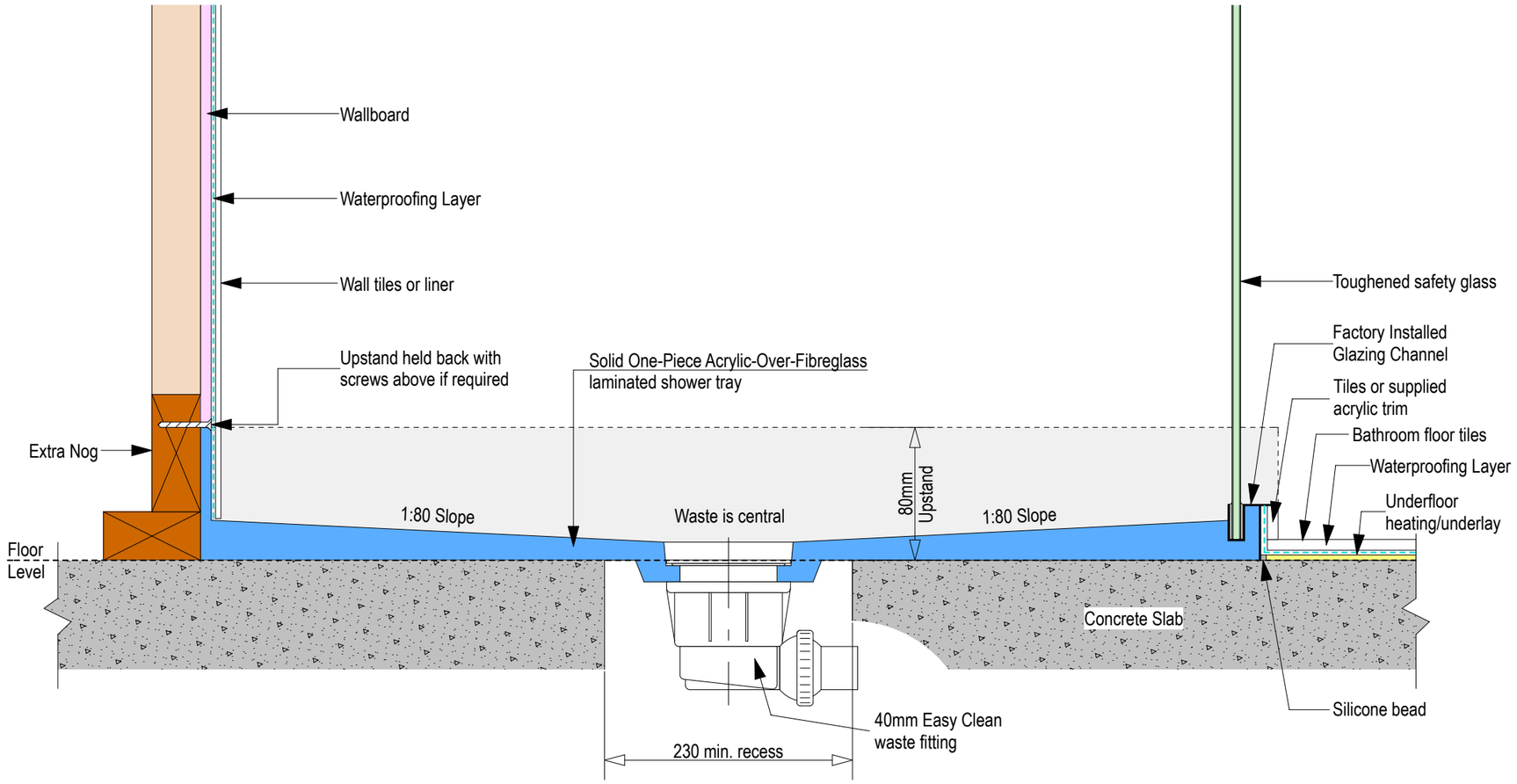

Quub

atlantis

Quub

Quub 3D

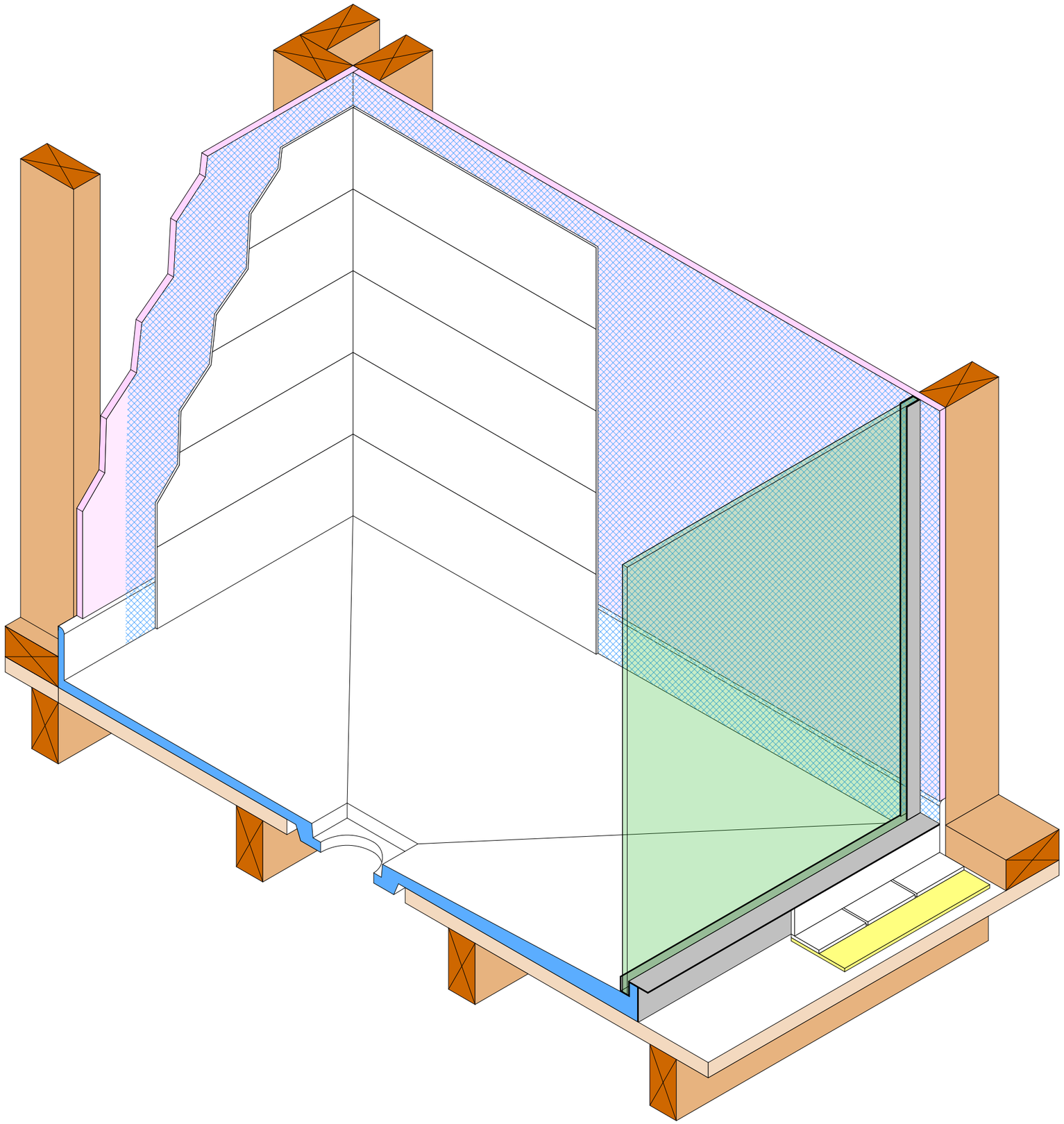

Quub

atlantis

Quub